ST-5651

PWM, 1 Channel Output, RS422

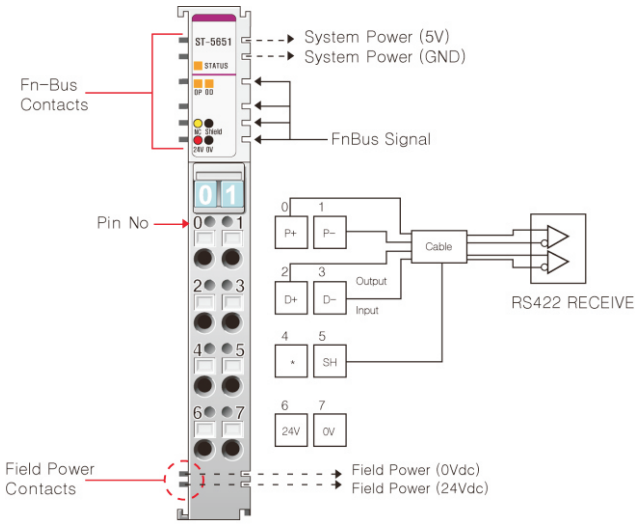

Item	ST-5651
Output Specification	
Number of Channel	1 Channel, RS422 Differential Output
Number of Output	2 Output (1 Pulse Output, 1 Pulse Direction Output)
Indicators	1 Green/Red Fn-Bus Status 1 Pulse Output LED, 1 Pulse Direction Output LED
Pulse Output Frequency	5 ~ 200,000Hz± 1.0%
Pulse Output Duty	50%± 0.1% Fixed, Ton>10us, Toff>10us
Pulse Output Quantity with One Command	Continuous Pulse Output Max. +1 ~ 32767 : Pulse Direction Output OFF Max. -1 ~ 32767 : Pulse Direction Output ON
Pulse Output Counter	Signed 32bit-wide
Common Type	1 Common, 1 Shield
General Specification	
Power Dissipation	Max. 150mA @5.0Vdc
Isolation	I/O to Logic : Photocoupler Isolation I/O to Field Power : Non-Isolation
Field Power	Supply Voltage : 24 Vdc nominal Voltage Range : 18 ~ 28.8Vdc Power Dissipation : Max. 40mA @ 24Vdc
Wiring	I/O Cable Max. 2.0㎟ (AWG#14)
Weight	70g
Module Size	12mm x 99mm x 70mm
Environment Condition	Refer to " Environment Specification"(page : 1-191)
Pin No.	Description
0	Pulse+ (RS422 Differential Output)
1	Pulse- (RS422 Differential Output)
2	Direction+ (RS422 Differential Output)
3	Direction- (RS422 Differential Output)
4	-
5	Shield
6	Field Power 24V
7	Field Power 0V, Common
-	-
-	-
-	-
-	-
-	-
-	-
-	-
-	-