ST-3702

RTD, 2 Channels, Status

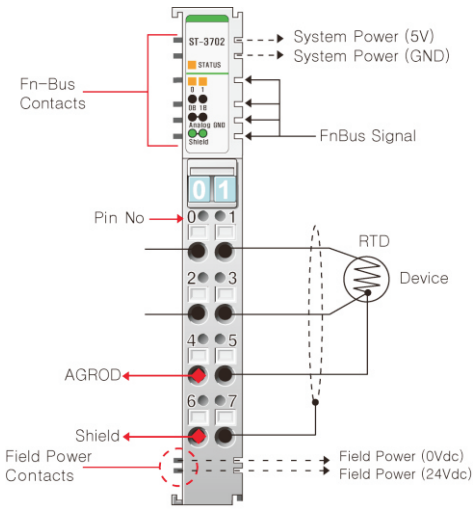

Item	ST-3702
Input Specification	
Number of Inputs	2 Channels Single Ended, Non-isolated Between Channels
Indicators	2 Green/Red States, 1 Green/Red Fn-Bus State
Sensor Types	PT50, PT100, PT200, PT500, PT1000, JPT100, JPT200, JPT500, JPT1000, NI100, NI200, NI500, NI1000, NI120, CU10, Resistance 100mΩ/Bit, Resistance 10mΩ/Bit, Resistance 20mΩ/Bit
Conversion Time	200msec / All Channel
Data Format	16bits Integer (2's compliment)
Dissolution ability	0.1℃ / 10mΩ
Module Error	±0.1% Full Scale @25℃ ±0.3% Full Scale @0℃, 60℃
Calibration	Not Required
Diagnostic	Channel Open (if it is not Connected, Data=0x8000)
Common Type	2 Channels / 2COM (Single Common)
General Specification	
Power Supply	From System Power DC/DC
Power Dissipation	Max. 70mA@5.0Vdc
Isolation	I/O to Logic : Photocoupler Isolation Field Power : Not Connected
Wiring	I/O Cable Max. 2.0㎟
Weight	70g
Module Size	12mm x 99mm x 70mm
Environment Condition	Refer to " Environment Specification"(page : 1-191)
Pin No.	Description
0	Input Channel 0-A
1	Input Channel 1-A
2	Input Channel 0-B
3	Input channel 1-B
4	Analog Ground
5	Analog Ground
6	Shield
7	Shield
-	-
-	-
-	-
-	-
-	-
-	-
-	-
-	-
-	-
-	-