CREVIS

NA-9261

사용설명서

FieldBus Input/Output System

FnIO S-series

CANopen

■ CANopen Network Adapter

■ PROFIBUS Network Adapter

■ Digital Input / Output

■ Analog Input / Output

CVS-18-04-076 **Rev 1.00**

제품을 사용하시기 전에

저희 (주)크래비스 제품을 구입해 주셔서 감사합니다. 제품의 효율적인 사용을 위하여 반드시 본 사용 설명서의 내용을 숙지 하신 후 사용해 주십시오.

안전상의 주의 사항

*경고와 주의로 구분되어 있으니, 필히 숙지 하여 주십시오.

지시사항을 위반하였을 때, 심각한 상황을 초래하여 사망 또는 중상을 입을 가능성이 있는 경우

⚠ 경고

- **전원이 인가된 상태에서 단자대를 만지지 마십시오.** 감전사고 및 오동작의 원인이 됩니다.
- **전원이 인가된 상태에서 제품을 조립하지 마십시오.** 화재, 감전사고 및 오동작의 원인이 됩니다.
- **제품내부에 금속성 이물질이 유입되지 않도록 하십시오.** 화재, 감전사고 및 오동작의 원인이 됩니다.
- **전원이 인가된 상태에서 배선 작업을 하지 마십시오.** 감전사고 및 오동작의 원인이 됩니다.
- **배선 작업은 전기공사 전문가가 해 주십시오.** 화재, 감전사고 및 오동작의 원인이 됩니다

지시사항을 위반하였을 때, 경미한 상해나 제품손상 및 대물손해가 발생할 가능성이 있는 경우

⚠ 주의

- **제품의 정격전압 및 단자배열을 확인 후 배선하여 주십시오.** 화재,감전사고, 오동작의 원인이 됩니다.
- **주변 온도가 55℃를 넘는 장소는 피해 주십시오.** 화재,감전사고, 오동작의 원인이 됩니다.
- **직사 광선이 직접 노출된 장소는 피해 주십시오.** 화재,감전사고, 오동작의 원인이 됩니다.
- **주변 습도가 85%를 넘는 장소는 피해 주십시오.** 화재,감전사고, 오동작의 원인이 됩니다.
- **가연성 물질이 있는 주변에 설치하지 마십시오.** 화재의 원인이 됩니다.
- **제품에 직접 진동이 인가되지 않도록 하십시오.** 화재 및 감전의 원인이 됩니다.
- **전문 A/S요원 외에는 제품을 분해,수리,개조하지 마십시오.** 화재 및 감전사고의 원인이 됩니다.
- **사용설명서에 명기된 환경조건에서 사용해 주십시오.** 감전, 화재, 오동작 또는 제품 열화의 원인이 됩니다.
- **확장 연결되는 모듈의 부하는 규정된 정격 이내의 것을 연결하십시오.** 화재, 오동작 또는 고장의 원인이 됩니다.

1. NA-9261 제품 사양

구분	일반사양	구분	상세사양
사용/보존 온도	-20℃~55℃ / -40℃~85℃	Network 방식	CANopen
사용/보존습도	5% ~ 90% 단, 이슬이 맺히지 않을 것	Cable	CANopen 전용 Cable
내진동/내충격	IEC 60068-2-6 / 10G	Cable 길이(m)	25m ~ 5km, Depending on Baudrate
EMC/ESD	EN61000-6-2 / EN61000-6-4	통신속도(Kbps)	10Kbps ~ 1000Kbps
확장 모듈 위치	FnIO-S series의 가장 왼쪽에 장착	확장모듈수	최대 63 모듈
사용환경	부식성 가스가 없고, 먼지가 심하지 않을 것	Number of Nodes	1 ~ 99 Node / Max.
필드 공급전압	Class2, 24VDC 24VDC (11VDC ~ 28.8VDC)	Peripheral signal	Input 252 bytes / Output 252 bytes
필드 공급전류	최대 10A	Number of PDOs available	32 Transmit PDOs / 32 Receive PDOs
FnBus공급전류	최대 1.5A@5VDC	Number of SDOs available	1 Standard SDOs
Isolation	Network to Logic : Isolation Logic to Field power : Isolation Logic to System power : Non-isolation	Station Type	CANopen Slave
외형치수	54mm × 99mm × 70mm	Node 번호 설정	Rotary 스위치 2개(x10, x1)
무게	155g	내부 소비전류	40mA (NA-9261, 1개 제품)
인증	CE, UL, Reach, RoHS		Class 2, adjacent to voltage rating (30Vmax.)

Update date : 2017.9.25

* Specifications and designs may be changed without advance Notice.

2. 모듈의 부분별 명칭과 기능

▶ 2-1. Wiring of communication & System power line for CanOpen

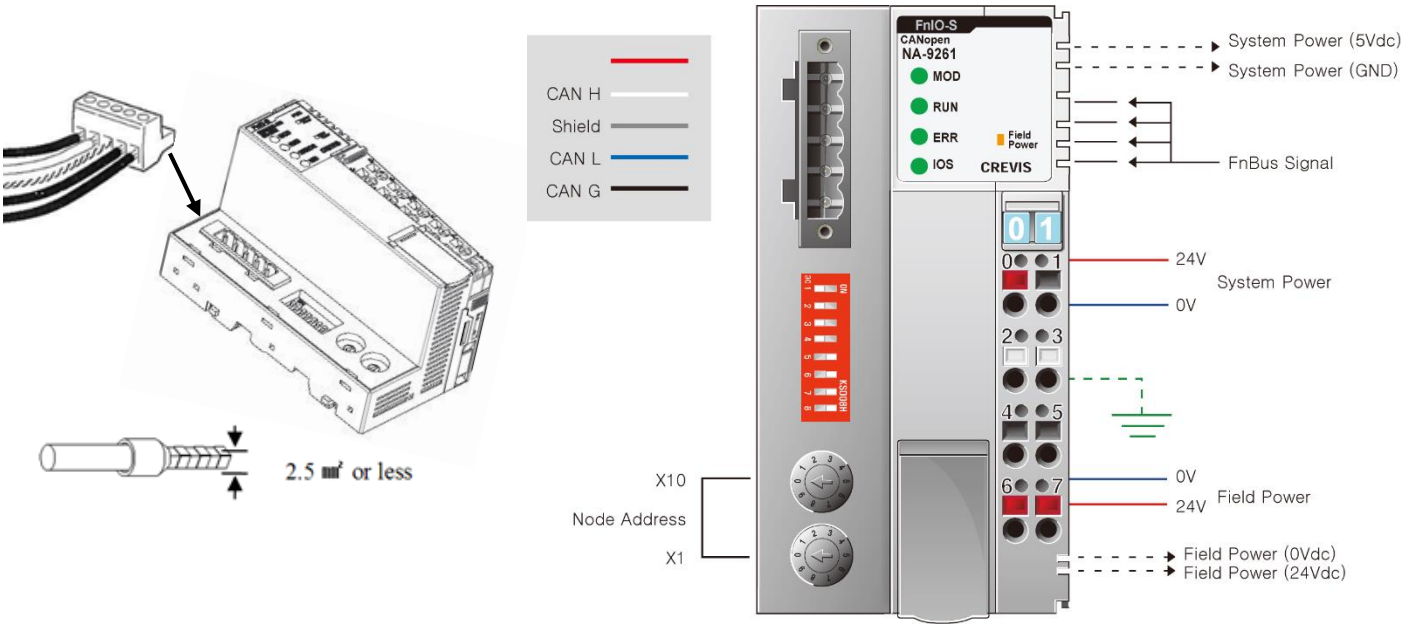

3. 모듈 설치 방법

▶ 3-1. Din-Rail에 모듈 장착 방법

① Din-Rail 위에서 아래 방향으로 살짝 눌러 주십시오.

② 딸칵 소리가 날 때 까지 눌러 주시면 장착이 완료됩니다.

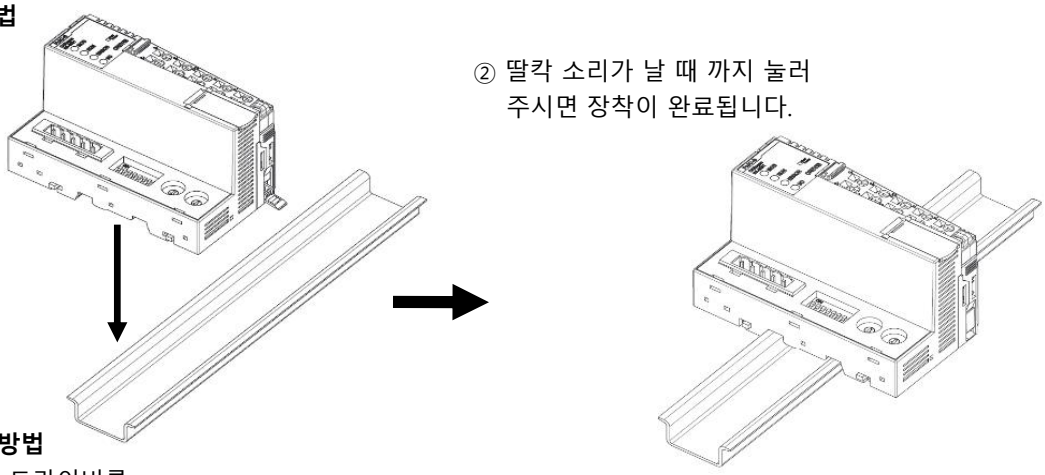

▶ 3-2. Din-Rail에서 모듈 탈착 방법

① Din rail 고정용 고리를 (–) 자 드라이버를 이용하여 아래로 내려주십시오.

② 모듈의 양쪽 끝을 잡고 위 방향으로 들어 주시면 탈착 됩니다.

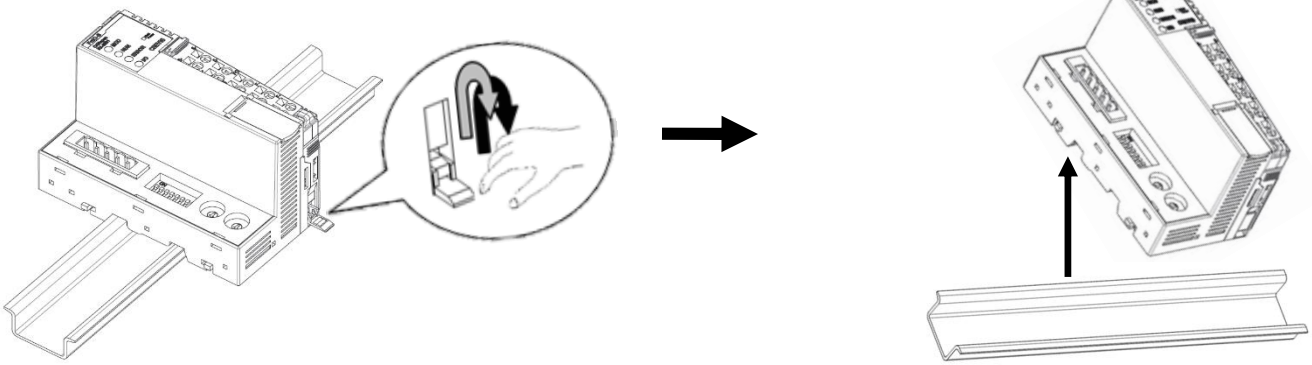

4. STATUS LED

상태 표시 LED 설명

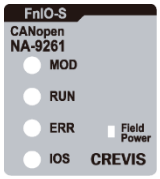

Item	LED is	State	To indicate :
MOD LED	Off	Not Powered	Power is not supplied to the unit.
	Green	Normal Operation	The unit is operating in normal condition.
	Red	Unrecoverable Fault	The device has an unrecoverable fault. - Memory error or CPU watchdog error.
RUN LED	Off	Not Powered	Module is either not getting power, or it is NOT_ACTIVE status. Module is initializing.
	Single Flash Green	Stopped	Module is stopped
	Blinking Green	Pre Operation	Module is in PRE_OPERATION
	Green	Operation	Module is in OPERATION
ERR LED	Off	Not Powered	Module is not getting powered or No error.
	Single Flash	Warning limit reached	At least one of the error counters of the CAN controller has reach ed or exceeded the warning limit.
	Double Flash	Error control Event	A guard event (NMT-Slave or NMT-Master) or a Heartbeat event has occurred.
	Triple Flash	Sync. Error	The SYNC message has not been received within then configured communication cycle period time out (see index 0x1006)
	Quadruple Flash	Event-timer Error	An expected PDO has not been received before the event-timer elapsed.
	On	Bus Off	The CAN controller is bus off.
IOS LED	Off	Not Powered No Expansion Module	A device has no IO modules or may not be powered
	Flashing Green	Internal Bus On-line, Not Exchanging I/O data	Internal Bus is normal but it is not exchanging I/O data. (Passed the expansion module configuration)
	Green	Internal Bus Connection, Exchanging I/O data	Exchanging I/O data
	Flashing Red	Internal Bus Connection Fault during Exchanging I/O data	One or more IO module occurred in fault state. - Changed IO module configuration. - FnBus communication failure.
	Red	Expansion Configuration Failed	Failed to initialize expansion module. - Detect invalid expansion module ID. - Overflow Input / Output size. - Too many expansion module. - Initial protocol failure. - Mismatch vendor code between adapter and expansion units.
Field Power LED	Off	Not Supplied	Not supplied with 24V dc field power
	Green	Supplied	Supplied with 24V dc field power

㈜ 크래비스

(446-930) 경기도 용인시 기흥구 기곡로 29-4

TEL : 031-899-4599 FAX : 031-899-4509

Homepage : www.crevis.co.kr E-Mail : crevis@crevis.co.kr

c UL us LISTED IND. CONT. EQ. 4KA9 E235505

CANopen

* Specifications and designs could be changed without advance Notice

5. 스위치 설정 및 케이블

▶ 5-1. Rotary switch

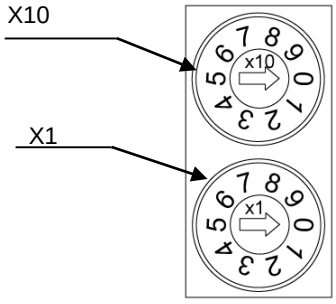

⚠ 주의

*** Node 번호(자국 번호) 설정 시 주의 사항**

1. 접속가능 Node수의 범위 내에서 설정합니다.(Node번호 01 ~ 99)
2. 범위 밖의 Node번호를 설정하면 통신 Error가 발생합니다.
3. Node번호를 중복 설정하면 통신 Error가 발생합니다.

Baud rate 설정

Dip S/W는 1에서 8까지 설정할 수 있습니다.

Dip Pole#	Description	
1	Terminal Resister	On: Terminal Resister On
2	Reserved	
3		
4		
5	Baudrate #4	Default: 0 (1000Kbps) 5 6 7 8 (ex.) 0 0 0 1 : 10Kbps 0 0 1 0 : 20Kbps 0 0 1 1 : 50Kbps 0 1 0 0 : 100Kbps 0 1 0 1 : 125Kbps 5 6 7 8 (ex.) 0 1 1 0 : 250Kbps 0 1 1 1 : 500Kbps 1 0 0 0 : 800Kbps 1 0 0 1 : 1000Kbps
6	Baudrate #3	
7	Baudrate #2	
8	Baudrate #1	

▶ 5-2. I/O Process Image Map

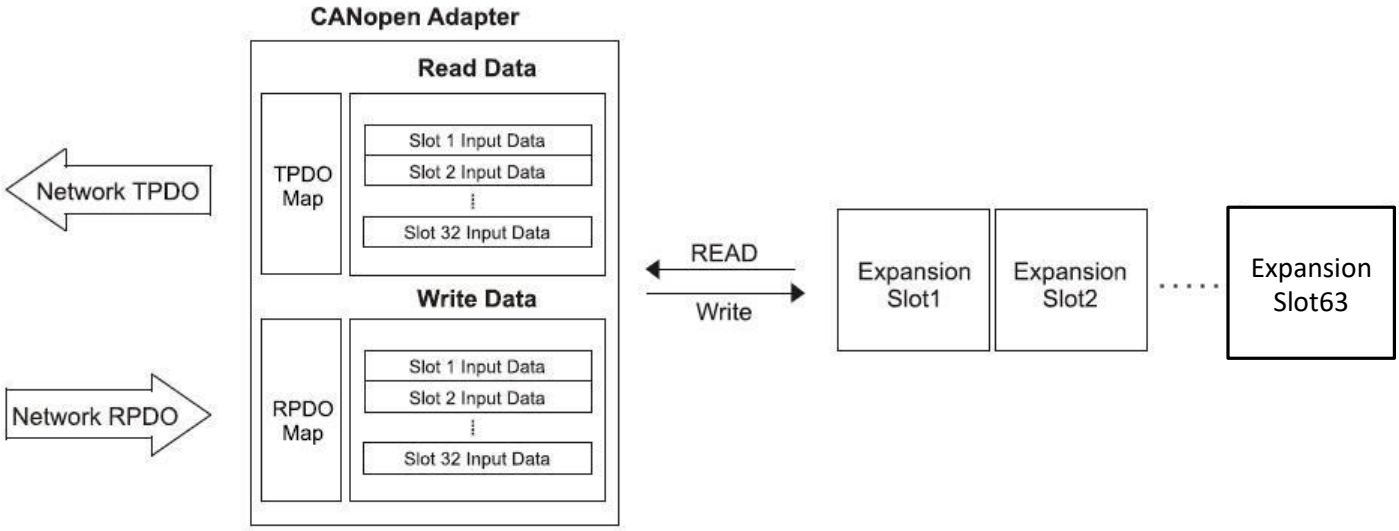

▶ 5-3. Bus Cable and Termination Resistors

Bus length [m]	Bus cable		Termination **resistance [Ω]**	Baud rate [Kbit/s]
	Length-related Resistance [m/m]	**Cross-section [mm²]**		
0 ... 40	70	0.25 … 0.34	124	1000 at 40m
40 … 300	< 60	0.34 … 0.6	150 … 300	> 500 at 100m
300 ... 600	< 40	0.5 ... 0.6	150 ... 300	> 100 at 500 m
600 ... 1000	< 26	0.75 ... 0.8	150 ... 300	> 50 at 1 km

CREVIS

NA-9261

Quick Guide

FieldBus Input/Output System

FnIO S-series

CANopen

- ■ CANopen Network Adapter
- ■ PROFIBUS Network Adapter
- ■ Digital Input / Output
- ■ Analog Input / Output
- ■ Special Module

Before using the unit

*We appreciate you for purchasing CREVIS Products. To use the units more effectively, please read this quick guide and refer to the respective user manual for further details.

Cautions for your Safety

If you don't follow the directions, it could cause a personal injury, damage to the equipment or explosion **Warning!**

- Do not assemble the products and wire with power applied to the system. Else it may cause an electric arc, which can result into unexpected and potentially dangerous action by field devices. Arching is explosion risk in hazardous locations. Be sure that the area is non-hazardous or remove system power appropriately before assembling or wiring the modules.
- Do not touch any terminal blocks or IO modules when system is running. Else it may cause the unit to an electric shock or malfunction.
- Keep away from the strange metallic materials not related to the unit and wiring works should be controlled by the electric expert engineer. Else it may cause the unit to a fire, electric shock or malfunction.

If you disobey the instructions, there may be possibility of personal injury, damage to equipment or explosion. Please follow below Instructions. **Caution!**

- Check the rated voltage and terminal array before wiring. Avoid the circumstances over 55℃ of temperature. Avoid placing it directly in the sunlight.
- Avoid the place under circumstances over 85% of humidity.
- Do not place Modules near by the inflammable material. Else it may cause a fire.
- Do not permit any vibration approaching it directly.
- Go through module specification carefully, ensure inputs, output connections are made with the specifications. Use standard cables for wiring.
- Use Product under pollution degree 2 environment.

1. NA-9261 Specification

▶1-1. General Specification

ITEM	SPECIFICATION
Surrounding Air Temp./ Ambient Temp.	-20℃~55℃ / -40℃~85℃
Relative Humidity	5% ~ 90% without condensation
Durable-vib. /impact	IEC 60068-2-6 / 10G
EMC/ESD	EN61000-6-2 / EN61000-6-4
Mount Position	On the left of FnIO-S series
Atmosphere	Not so dusty without corrosive gas
Field Supp. Volt.	Class 2, 24VDC 24VDC (11VDC ~ 28.8VDC)
Field Supp. Cur.	Max. 10A
FnBus Sup. Cur	Max. 1.5A@5VDC
Isolation	Network to Logic : Isolation Logic to Field power : Isolation Logic to System power : Non-isolation
Size	54mm × 99mm × 70mm
Weight	155g
Certification	CE, UL, Reach, RoHS

▶1-2. Technical Specification

ITEM	SPECIFICATION
Network Type	CANopen
Cable	CANopen Special Cable
Cable Length	25m ~ 5km, Depending on Baudrate
Comm. Sp(Kbps)	10Kbps ~ 1000Kbps
Max. Station No.	Max. 63 Modules
Number of Nodes	1 ~ 99 Nodes
Peripheral signal	Input 252 bytes / Output 252 bytes
Number of PDOs available	32 Transmit PDOs / 32 Receive PDOs
Number of SDOs available	1 Standard SDOs
Station Type	CANopen Slave
Node address Set.	Rotary S/W #1, #2 (x10, x1)
Power Dissipation	40mA

Class 2, adjacent to voltage rating (30Vmax.)

* Specifications and designs could be changed without advance Notice

*** Power Isolators must be used according to the usage of 5VDC/24VDC/48VDC or AC Voltage modules**

2. How to wire communication & Power

▶ 2-1. Wiring of communication & System power line for CanOpen

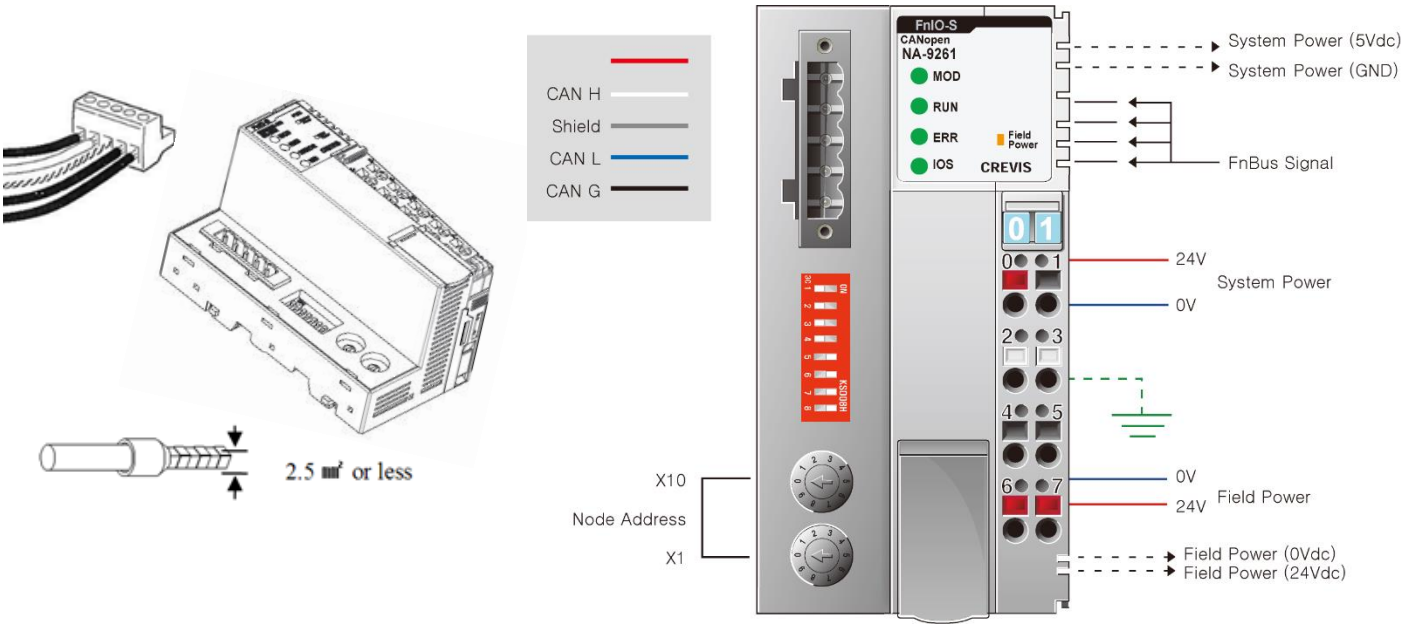

3. Module Mounting

▶ 3-1. How to mount on Din-Rail

① Press down the module lightly on the Din-Rail until it clicks.

② Press down till you can hear "click" for complicated mount.

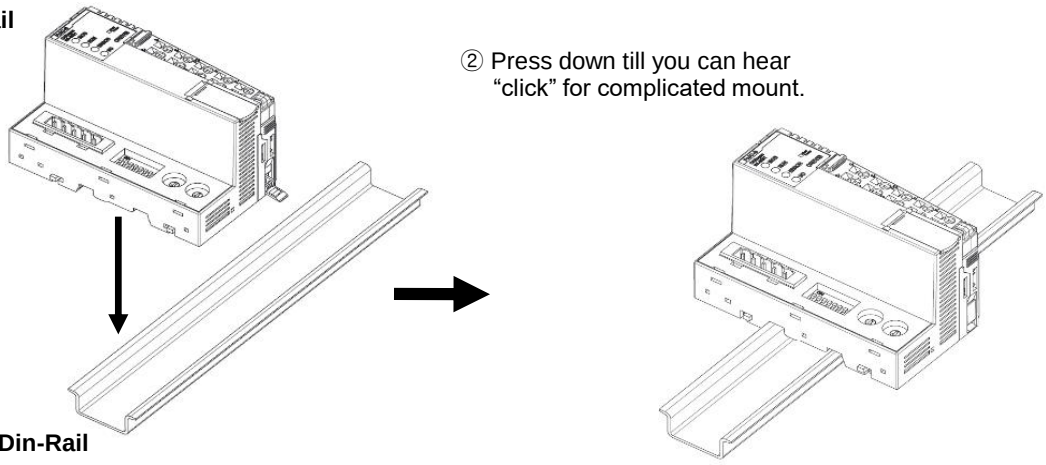

▶ 3-2. How to dismount from Din-Rail

① Pull down the locking mechanism by using (-) screw driver as the following pictures ;

② Pull up the module to remove from the din rail.

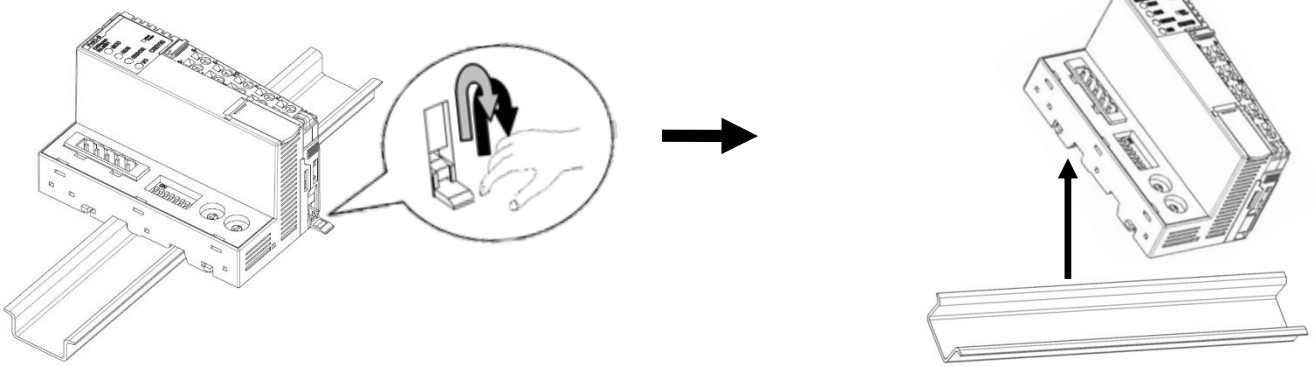

4. STATUS LED

Status LED Window Description

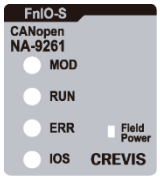

Item	LED is	State	To indicate :
MOD LED	Off	Not Powered	Power is not supplied to the unit.
	Green	Normal Operation	The unit is operating in normal condition.
	Red	Unrecoverable Fault	The device has an unrecoverable fault. - Memory error or CPU watchdog error.
RUN LED	Off	Not Powered	Module is either not getting power, or it is NOT_ACTIVE status. Module is initializing.
	Single Flash Green	Stopped	Module is stopped
	Blinking Green	Pre Operation	Module is in PRE_OPERATION
	Green	Operation	Module is in OPERATION
ERR LED	Off	Not Powered	Module is not getting powered or No error.
	Single Flash	Warning limit reached	At least one of the error counters of the CAN controller has rea ched or exceeded the warning limit.
	Double Flash	Error control Event	A guard event (NMT-Slave or NMT-Master) or a Heartbeat eve nt has occurred.
	Triple Flash	Sync. Error	The SYNC message has not been received within then configur ed communication cycle period time out (see index 0x1006)
	Quadruple Flash	Event-timer Error	An expected PDO has not been received before the event-timer elapsed.
	On	Bus Off	The CAN controller is bus off.
IOS LED	Off	Not Powered No Expansion Module	A device has no IO modules or may not be powered
	Flashing Green	Internal Bus On-line, Not Exchanging I/O data	Internal Bus is normal but it is not exchanging I/O data. (Passed the expansion module configuration)
	Green	Internal Bus Connection, Exchanging I/O data	Exchanging I/O data
	Flashing Red	Internal Bus Connection Fault during Exchanging I/O data	One or more IO module occurred in fault state. - Changed IO module configuration. - FnBus communication failure.
	Red	Expansion Configuration Failed	Failed to initialize expansion module. - Detect invalid expansion module ID. - Overflow Input / Output size. - Too many expansion module. - Initial protocol failure. - Mismatch vendor code between adapter and expansion units.
Field Power LED	Off	Not Supplied	Not supplied with 24V dc field power
	Green	Supplied	Supplied with 24V dc field power

Crevis Co.,Ltd.

29-4, Gigok-ro, Giheung-gu, Yongin-si,
Gyeonggi-do, Korea 446-930
TEL : +82-31-899-4599 FAX : +82-31-899-4509
Homepage : www.crevis.co.kr E-Mail : crevis@crevis.co.kr

c UL us LISTED
IND. CONT. EQ.
4KA9 E235505

CANopen

* Specifications and designs could be changed without advance Notice

5. Name of each part

▶ 5-1. Rotary switch

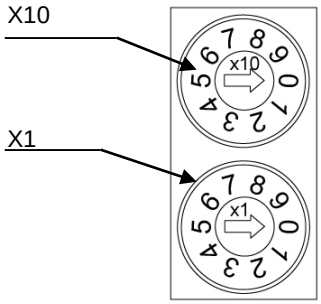

Node ID(Station No.) Setting

1. set within the range of connection Node number.
 (Node ID No. 01 ~ 99)
2. When double setting Node no., Communication Error occurs.

Caution!

(2) Baud rate Setting

The select S/W can be set in the range from 1 to 8.

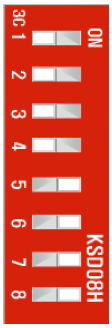

Dip Pole#	Description	
1	Terminal Resister	On: Terminal Resister On
2	Reserved	
3		
4		
5	Baudrate #4	Default: 0 (1000Kbps) 5 6 7 8 (ex.) 5 6 7 8 (ex.) 0 0 0 1 : 10Kbps 0 1 1 0 : 250Kbps 0 0 1 0 : 20Kbps 0 1 1 1 : 500Kbps 0 0 1 1 : 50Kbps 1 0 0 0 : 800Kbps 0 1 0 0 : 100Kbps 1 0 0 1 : 1000Kbps 0 1 0 1 : 125Kbps
6	Baudrate #3	
7	Baudrate #2	
8	Baudrate #1	

▶ 5-2. I/O Process Image Map

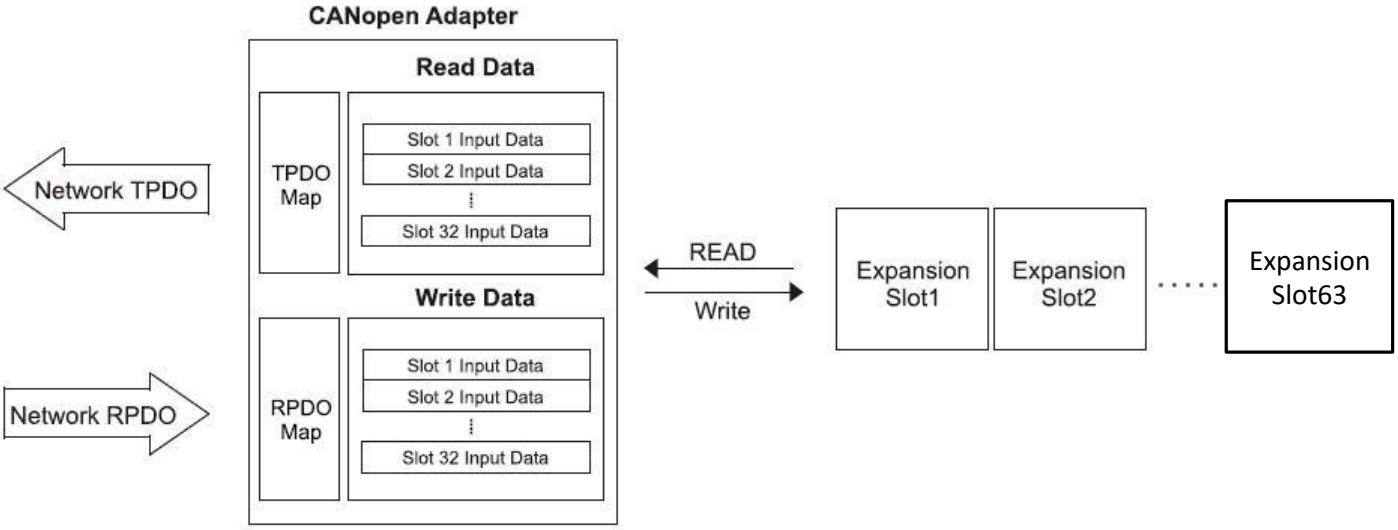

▶ 5-3. Bus Cable and Termination Resistors

Bus length [m]	Bus cable		Termination **resistance [Ω]**	Baud rate [Kbit/s]
	Length-related Resistance [m/m]	**Cross-section [mm²]**		
0 ... 40	70	0.25 … 0.34	124	1000 at 40m
40 … 300	< 60	0.34 … 0.6	150 … 300	> 500 at 100m
300 ... 600	< 40	0.5 ... 0.6	150 ... 300	> 100 at 500 m
600 ... 1000	< 26	0.75 ... 0.8	150 ... 300	> 50 at 1 km