# CC-Link Network Adapter
# AT2-Series

# AT2-R3xx
## User Manual

Version 1.04

**2013 CREVIS Co.,Ltd**

| DOCUMENT CHANGE SUMMARY | | | | |
|---|---|---|---|---|
| REV | PAGE | REMARKS | DATE | EDITOR |
| 1.0 | New Document | | 2011/11/4 | JE KANG |
| 1.01 | | New product AT2-R338, AT2-R339 | 2011/11/11 | JE KANG |
| 1.02 | 6 | Add your experience | 2012/1/13 | JE KANG |
| | | Add the Certificate RoHS | 2012/3/21 | JE KANG |
| 1.03 | | Changed Crevis TEL | 2013/4/4 | JE KANG |
| 1.04 | | Environment Spec. 50℃→55℃ (UL Temp)<br>Delete AT2-R338, AT2-R339 | 2013/7/3 | JE KANG |
| | | | | |
| | | | | |

## Table of Contents

1. Important Notes ..... 6
1.1. Safety Instruction ..... 7
1.1.1. Symbols ..... 7
1.1.2. Safety Notes ..... 7
1.1.3. Certification ..... 7
2. AT2 CC-LINK MODULE LIST ..... 8
3. Specification of CC-Link AT2-Series ..... 9
3.1. LED Indicator ..... 10
3.1.1. PWR Status LED (PWR) ..... 10
3.1.2. RUN Status LED (RUN) ..... 10
3.1.3. ERROR Status LED (ERR) ..... 10
3.1.4. Expansion I/O Module Status LED (I/O) ..... 11
3.2. The Interface ..... 12
3.2.1. AT2-R311 ..... 12
3.2.2. AT2-R312 ..... 13
3.2.3. AT2-R321 ..... 14
3.2.4. AT2-R322 ..... 15
3.2.5. AT2-R325 ..... 16
3.2.6. AT2-R333 ..... 17
3.2.7. AT2-R334 ..... 18
3.2.8. AT2-R336 ..... 19
3.2.9. AT2-R337 ..... 20

3.2.10. AT2-R355 ....21
3.2.11. AT2-R356 ....22
3.2.12. AT2-R357 ....23
3.3. Environment & Communication Interface Specification ....24
3.4. Specification ....25
3.4.1. AT2-R311 ....25
3.4.2. AT2-R312 ....26
3.4.3. AT2-R321 ....27
3.4.4. AT2-R322 ....28
3.4.5. AT2-R325 ....29
3.4.6. AT2-R333 ....30
3.4.7. AT2-R334 ....31
3.4.8. AT2-R336 ....32
3.4.9. AT2-R337 ....33
3.4.10. AT2-R355 ....34
3.4.11. AT2-R356 ....35
3.4.12. AT2-R357 ....36
4. Dimension ....37
4.1. AT2-R3xx ....37
5. Mechanical Set Up ....38
5.1. Total Expansion ....38
5.2. Plugging and Removal of the Components. ....38
5.3. Internal FnBUS/Field Power Contacts ....39

6. Configuration and Operation ....40
6.1. FnBus Specification ....40
6.1.1. FnBus System ....40
6.1.2. FnBus Pin Description ....41
6.2. I/O Process Image Map ....42
6.2.1. Remote Input Area ....43
6.2.2. Remote Output Area ....43
6.2.3. RWr / RWw Area ....44
6.2.4. System Area ....44
6.3. CC-Link Module(AT2-R3xx) Installation ....47
6.3.1. CC-Link Cable Specification ....47
6.3.2. Minimum radius of bending cable ....48
6.3.3. Connector ....48
6.4. CC-Link Module(AT2-R3xx)Configuration ....49
6.4.1. Terminator Resistor Specification ....49
6.4.2. Baudrate and Station No., MODE Setup ....50
7. Trouble Shooting ....51

# 1. Important Notes

Solid state equipment has operational characteristics differing from those of electromechanical equipment.

Safety Guidelines for the Application, Installation and Maintenance of Solid State Controls describes some important differences between solid state equipment and hard-wired electromechanical devices.

Because of this difference, and also because of the wide variety of uses for solid state equipment, all persons responsible for applying this equipment must satisfy themselves that each intended application of this equipment is acceptable.

In no event will CREVIS be responsible or liable for indirect or consequential damages resulting from the use or application of this equipment.

The examples and diagrams in this manual are included solely for illustrative purposes. Because of the many variables and requirements associated with any particular installation, CREVIS cannot assume responsibility or liability for actual use based on the examples and diagrams.

**Warning!**

✓ **If you don't follow the directions, it could cause a personal injury, damage to the equipment or explosion**

- Do not assemble the products and wire with power applied to the system. Else it may cause an electric arc, which can result into unexpected and potentially dangerous action by field devices. Arching is explosion risk in hazardous locations. Be sure that the area is non-hazardous or remove system power appropriately before assembling or wiring the modules.
- Do not touch any terminal blocks or IO modules when system is running. Else it may cause the unit to an electric shock or malfunction.
- Keep away from the strange metallic materials not related to the unit and wiring works should be controlled by the electric expert engineer. Else it may cause the unit to a fire, electric shock or malfunction.

**Caution!**

✓ **If you disobey the instructions, there may be possibility of personal injury, damage to equipment or explosion. Please follow below Instructions.**

- Check the rated voltage and terminal array before wiring. Avoid the circumstances over 55℃ of temperature. Avoid placing it directly in the sunlight.
- Avoid the place under circumstances over 85% of humidity.
- Do not place Modules near by the inflammable material. Else it may cause a fire.
- Do not permit any vibration approaching it directly.
- Go through module specification carefully, ensure inputs, output connections are made with the specifications. Use standard cables for wiring.
- Use Product under pollution degree 2 environment.

## 1.1. Safety Instruction

### 1.1.1. Symbols

| | |
|---|---|
| DANGER | Identifies information about practices or circumstances that can cause an explosion in a hazardous environment, which may lead to personal injury or death property damage, or economic loss. |
| IMPORTANT | Identifies information that is critical for successful application and understanding of the product |
| ATTENTION | Identifies information about practices or circumstances that can lead to personal Injury, property damage, or economic loss.<br>Attentions help you to identity a hazard, avoid a hazard, and recognize the consequences. |

### 1.1.2. Safety Notes

| | |
|---|---|
| DANGER | The modules are equipped with electronic components that may be destroyed by electrostatic discharge. When handling the modules, ensure that the environment (persons, workplace and packing) is well grounded. Avoid touching conductive components, e.g. FnBUS Pin. |

### 1.1.3. Certification

c-UL-us UL Listed Industrial Control Equipment, certified for U.S. and Canada

See UL File E235505

CE Certificate

EN 61000-6-2; Industrial Immunity

EN 61000-6-4; Industrial Emissions

RoHS (EU, CHINA)

## 2. AT2 CC-LINK MODULE LIST

| AT2-R3xx | Description | Common Type | Input/output Size (Byte) |
|---|---|---|---|
| AT2-R311 | Input, 32 points, Sink, 24Vdc, RTB | | In : 4 |
| AT2-R312 | Input, 32 points, Source, 24Vdc, RTB | | In : 4 |
| AT2-R321 | Output, 32 points, Sink, 24Vdc/0.5A, RTB | | Out : 4 |
| AT2-R322 | Output, 32 points, Source, 24Vdc/0.5A, RTB | | Out : 4 |
| AT2-R325 | Output, 16 points, Relay, 250Vac/2A, 24Vdc/2A, RTB | 4Pt/1Com | Out : 2 |
| AT2-R333 | Input, 16 points, Sink, 24Vdc, RTB<br>Output, 16 points, Source, 24Vdc/0.5A, RTB | | In : 2<br>Out : 2 |
| AT2-R334 | Input, 16 points, Source, 24Vdc, RTB<br>Output, 16 points, Sink, 24Vdc/0.5A, RTB | | In : 2<br>Out : 2 |
| AT2-R336 | Input, 16 points, Sink, 24Vdc, RTB<br>Output, 8 points, Relay, 250Vac/2A, 24Vdc/2A | 4Pt/1Com | In : 2<br>Out : 1 |
| AT2-R337 | Input, 16 points, Source, 24Vdc, RTB<br>Output, 8 points, Relay, 250Vac/2A, 24Vdc/2A | 4Pt/1Com | In : 2<br>Out : 1 |
| AT2-R355 | Output, 16 points, Relay, 250Vac/2A, 24Vdc/2A, RTB | 1Pt/1Com | Out : 2 |
| AT2-R356 | Input, 16 points, Sink, 24Vdc, RTB<br>Output, 8 points, Relay, 250Vac/2A, 24Vdc/2A | 1Pt/1Com | In : 2<br>Out : 1 |
| AT2-R357 | Input, 16 points, Source, 24Vdc, RTB<br>Output, 8 points, Relay, 250Vac/2A, 24Vdc/2A | 1Pt/1Com | In : 2<br>Out : 1 |
| | | | |
| | | | |
| | | | |
| | | | |
| | | | |
| | | | |
| | | | |
| | | | |
| | | | |

# 3. Specification of CC-Link AT2-Series

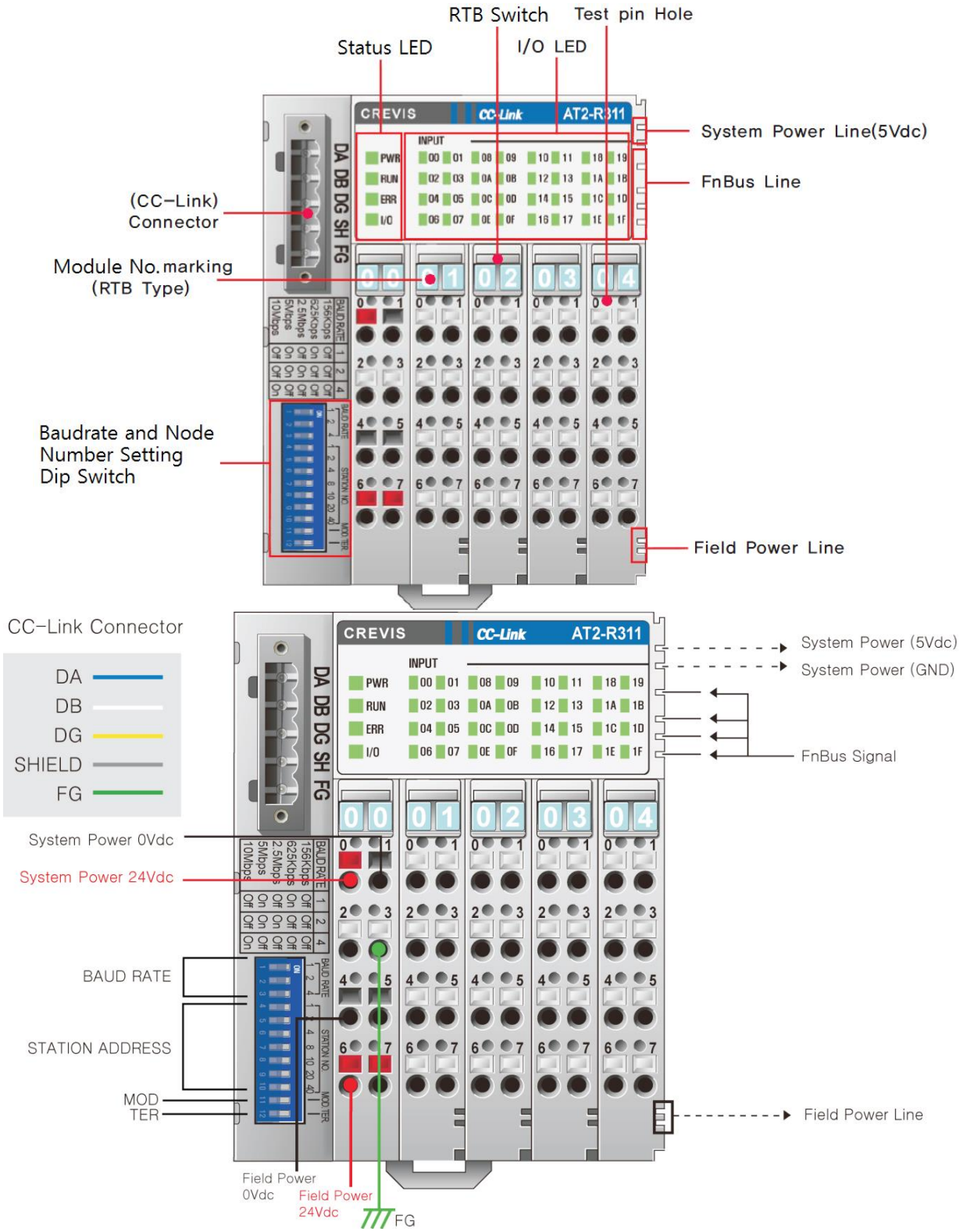

## 3.1. LED Indicator

### 3.1.1. PWR Status LED (PWR)

| State | LED is : | To indicate : |
|---|---|---|
| No Power | Off | No power is supplied to the unit. |
| Device Operational | Green | The unit is operating in normal condition. |
| Device in Standby | Flashing Green | The EEPROM parameter is not initialized yet.<br>Serial Number is zero value (0x00000000) |
| Minor Fault | Flashing Red | The unit has occurred recoverable fault in self-testing.<br>- EEPROM checksum fault |
| Unrecoverable Fault | Red | The unit has occurred unrecoverable fault in self-testing.<br>- Firmware fault |

### 3.1.2. RUN Status LED (RUN)

| State | LED is : | To indicate : |
|---|---|---|
| Not Powered<br>Not On-line<br>Connection-Timeout | Off | Device may not be powered or is resetting Hardware.<br>Device is not on-line.<br>Timeout |
| On-Line, Connection | Green | Device is receive both refresh and polling signals or just the refresh signal normally, after participating in the network |

### 3.1.3. ERROR Status LED (ERR)

| State | LED is : | To indicate : |
|---|---|---|
| Fail<br>Switch Setting Error<br>Communication Error | Red | - CRC Error<br>- Invalid Station Number<br>- Baud rate switch setting error during cancellation of reset (5 or greater) |
| Setting Change | Flashing Red | The switch setting has been changed from the setting at the rest cancellation. (blinks for 0.4 sec) |
| Device Operational | Off | Normal Communication<br>Resetting Hardware |

### 3.1.4. Expansion I/O Module Status LED (I/O)

| State | LED is : | To indicate : |
|---|---|---|
| Not Powered<br>No Expansion Module | Off | Device has no expansion module or may not be powered. |
| FnBus On-line,<br>Do not Exchanging I/O | Flashing<br>Green | FnBus is normal but does not exchanging I/O data<br>(Passed the expansion module configuration). |
| FnBus Connection,<br>Run Exchanging IO | Green | Exchanging I/O data |
| FnBus connection fault<br>during exchanging IO | Red | One or more expansion module occurred in fault state.<br>- Changed expansion module configuration.<br>- FnBus communication failure. |
| Expansion Configuration<br>Failed | Flashing<br>Red | Failed to initialize expansion module<br>- Detected invalid expansion module ID.<br>- Overflowed Input / Output Size<br>- Too many expansion module<br>- Initial protocol failure<br>- Mismatch vendor code between adapter and expansion module. |

## 3.2. The Interface

### 3.2.1. AT2-R311

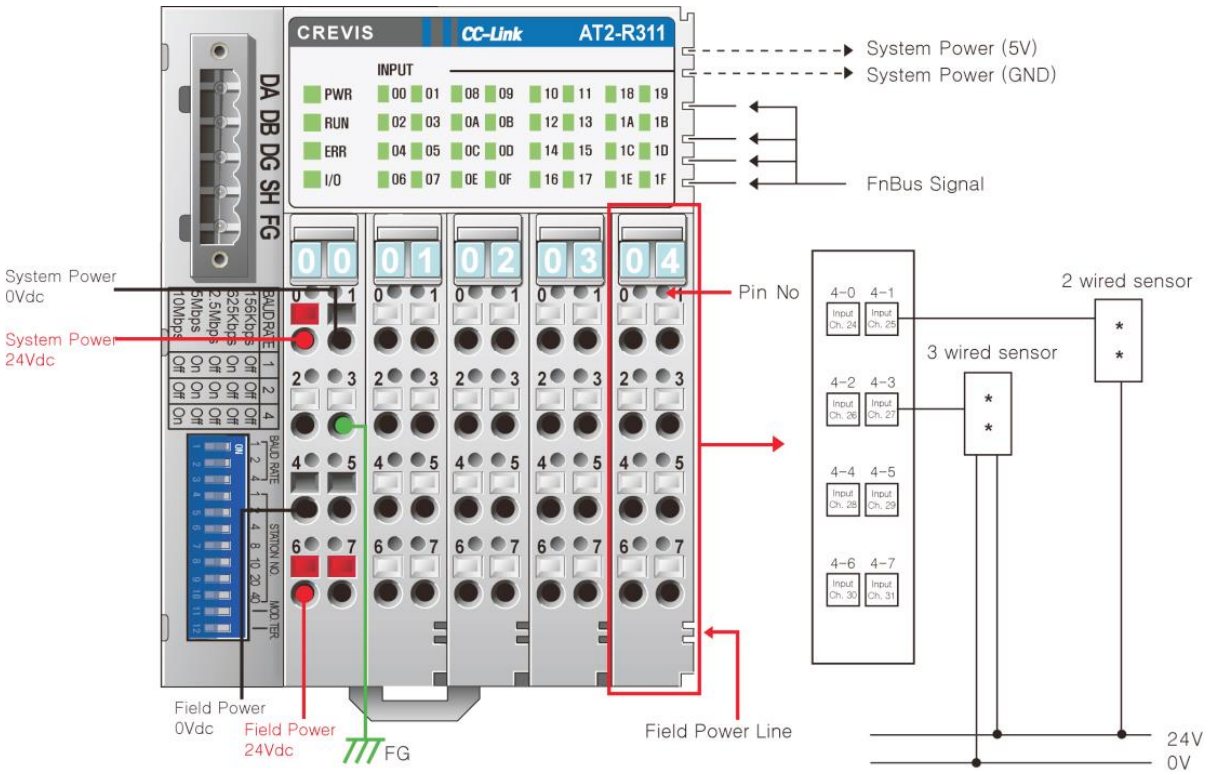


| Pin No. | Description | Pin No. | Description | Pin No. | Description | Pin No. | Description |
|---|---|---|---|---|---|---|---|
| 1-0 | Input Channel 0 | 2-0 | Input Channel 8 | 3-0 | Input Channel 16 | 4-0 | Input Channel 24 |
| 1-1 | Input Channel 1 | 2-1 | Input Channel 9 | 3-1 | Input Channel 17 | 4-1 | Input Channel 25 |
| 1-2 | Input Channel 2 | 2-2 | Input Channel 10 | 3-2 | Input Channel 18 | 4-2 | Input Channel 26 |
| 1-3 | Input Channel 3 | 2-3 | Input Channel 11 | 3-3 | Input Channel 19 | 4-3 | Input Channel 27 |
| 1-4 | Input Channel 4 | 2-4 | Input Channel 12 | 3-4 | Input Channel 20 | 4-4 | Input Channel 28 |
| 1-5 | Input Channel 5 | 2-5 | Input Channel 13 | 3-5 | Input Channel 21 | 4-5 | Input Channel 29 |
| 1-6 | Input Channel 6 | 2-6 | Input Channel 14 | 3-6 | Input Channel 22 | 4-6 | Input Channel 30 |
| 1-7 | Input Channel 7 | 2-7 | Input Channel 15 | 3-7 | Input Channel 23 | 4-7 | Input Channel 31 |

### 3.2.2. AT2-R312

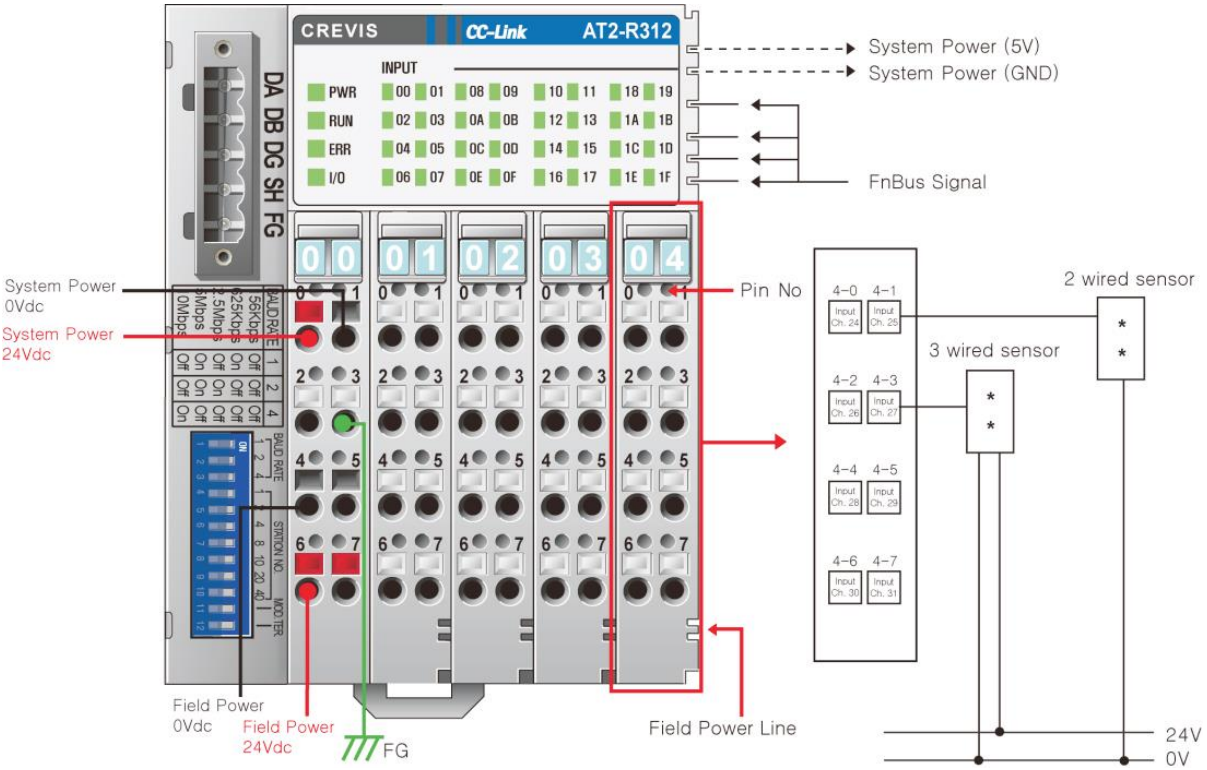


| Pin No. | Description | Pin No. | Description | Pin No. | Description | Pin No. | Description |
|---|---|---|---|---|---|---|---|
| 1-0 | Input Channel 0 | 2-0 | Input Channel 8 | 3-0 | Input Channel 16 | 4-0 | Input Channel 24 |
| 1-1 | Input Channel 1 | 2-1 | Input Channel 9 | 3-1 | Input Channel 17 | 4-1 | Input Channel 25 |
| 1-2 | Input Channel 2 | 2-2 | Input Channel 10 | 3-2 | Input Channel 18 | 4-2 | Input Channel 26 |
| 1-3 | Input Channel 3 | 2-3 | Input Channel 11 | 3-3 | Input Channel 19 | 4-3 | Input Channel 27 |
| 1-4 | Input Channel 4 | 2-4 | Input Channel 12 | 3-4 | Input Channel 20 | 4-4 | Input Channel 28 |
| 1-5 | Input Channel 5 | 2-5 | Input Channel 13 | 3-5 | Input Channel 21 | 4-5 | Input Channel 29 |
| 1-6 | Input Channel 6 | 2-6 | Input Channel 14 | 3-6 | Input Channel 22 | 4-6 | Input Channel 30 |
| 1-7 | Input Channel 7 | 2-7 | Input Channel 15 | 3-7 | Input Channel 23 | 4-7 | Input Channel 31 |

### 3.2.3. AT2-R321

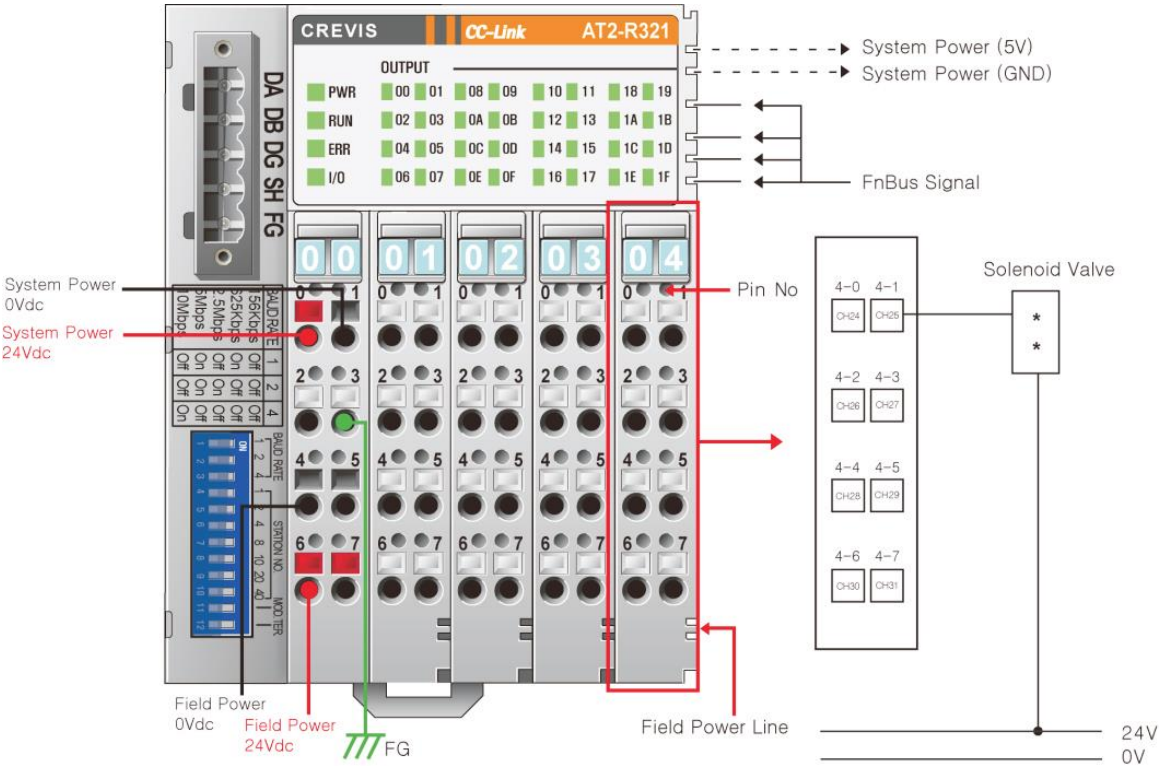


| Pin No. | Description | Pin No. | Description | Pin No. | Description | Pin No. | Description |
|---|---|---|---|---|---|---|---|
| 1-0 | Output Channel 0 | 2-0 | Output Channel 8 | 3-0 | Output Channel 16 | 4-0 | Output Channel 24 |
| 1-1 | Output Channel 1 | 2-1 | Output Channel 9 | 3-1 | Output Channel 17 | 4-1 | Output Channel 25 |
| 1-2 | Output Channel 2 | 2-2 | Output Channel 10 | 3-2 | Output Channel 18 | 4-2 | Output Channel 26 |
| 1-3 | Output Channel 3 | 2-3 | Output Channel 11 | 3-3 | Output Channel 19 | 4-3 | Output Channel 27 |
| 1-4 | Output Channel 4 | 2-4 | Output Channel 12 | 3-4 | Output Channel 20 | 4-4 | Output Channel 28 |
| 1-5 | Output Channel 5 | 2-5 | Output Channel 13 | 3-5 | Output Channel 21 | 4-5 | Output Channel 29 |
| 1-6 | Output Channel 6 | 2-6 | Output Channel 14 | 3-6 | Output Channel 22 | 4-6 | Output Channel 30 |
| 1-7 | Output Channel 7 | 2-7 | Output Channel 15 | 3-7 | Output Channel 23 | 4-7 | Output Channel 31 |

### 3.2.4. AT2-R322

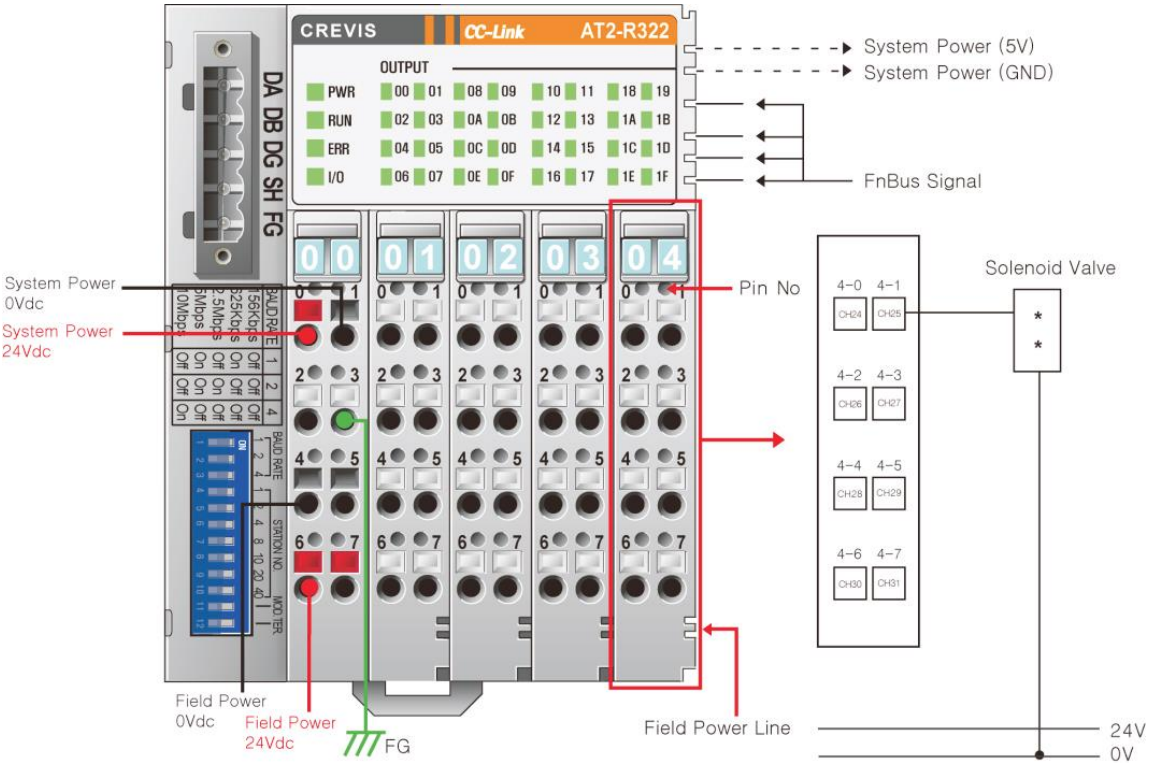


| Pin No. | Description | Pin No. | Description | Pin No. | Description | Pin No. | Description |
|---|---|---|---|---|---|---|---|
| 1-0 | Output Channel 0 | 2-0 | Output Channel 8 | 3-0 | Output Channel 16 | 4-0 | Output Channel 24 |
| 1-1 | Output Channel 1 | 2-1 | Output Channel 9 | 3-1 | Output Channel 17 | 4-1 | Output Channel 25 |
| 1-2 | Output Channel 2 | 2-2 | Output Channel 10 | 3-2 | Output Channel 18 | 4-2 | Output Channel 26 |
| 1-3 | Output Channel 3 | 2-3 | Output Channel 11 | 3-3 | Output Channel 19 | 4-3 | Output Channel 27 |
| 1-4 | Output Channel 4 | 2-4 | Output Channel 12 | 3-4 | Output Channel 20 | 4-4 | Output Channel 28 |
| 1-5 | Output Channel 5 | 2-5 | Output Channel 13 | 3-5 | Output Channel 21 | 4-5 | Output Channel 29 |
| 1-6 | Output Channel 6 | 2-6 | Output Channel 14 | 3-6 | Output Channel 22 | 4-6 | Output Channel 30 |
| 1-7 | Output Channel 7 | 2-7 | Output Channel 15 | 3-7 | Output Channel 23 | 4-7 | Output Channel 31 |

### 3.2.5. AT2-R325

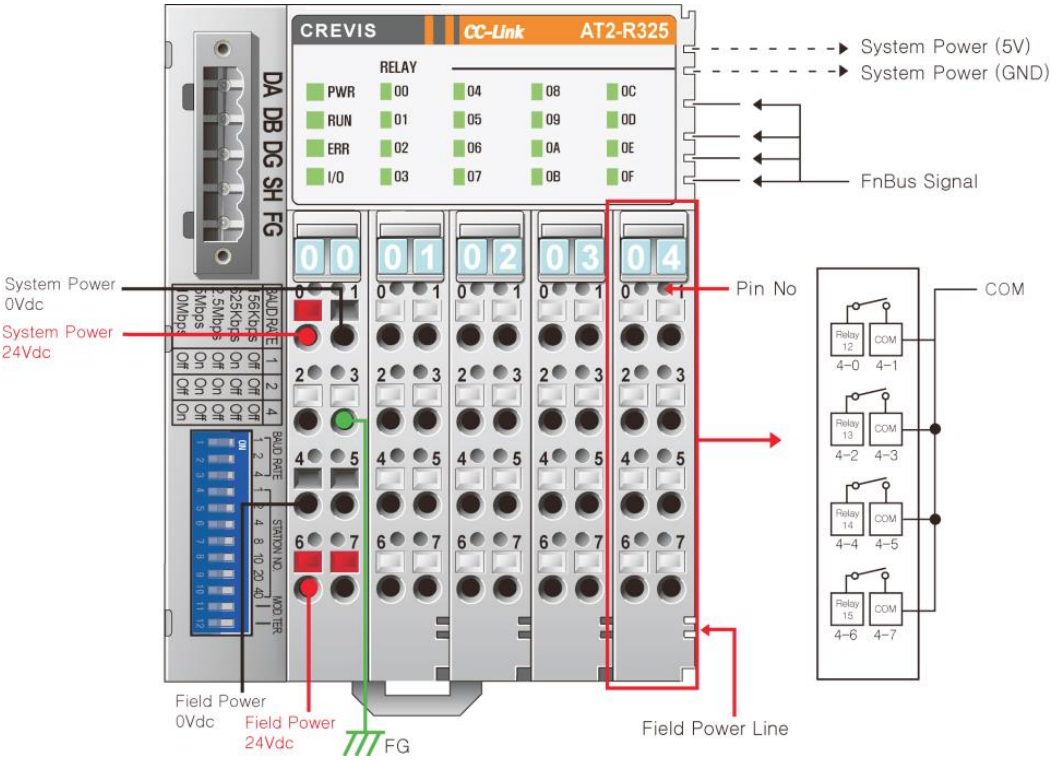


| Pin No. | Description | Pin No. | Description | Pin No. | Description | Pin No. | Description |
|---|---|---|---|---|---|---|---|
| 1-0 | Relay Output 0 | 2-0 | Relay Output 4 | 3-0 | Relay Output 8 | 4-0 | Relay Output 12 |
| 1-1 | COM 0 | 2-1 | COM 1 | 3-1 | COM 2 | 4-1 | COM 3 |
| 1-2 | Relay Output 1 | 2-2 | Relay Output 5 | 3-2 | Relay Output 9 | 4-2 | Relay Output 13 |
| 1-3 | COM 0 | 2-3 | COM 1 | 3-3 | COM 2 | 4-3 | COM 3 |
| 1-4 | Relay Output 2 | 2-4 | Relay Output 6 | 3-4 | Relay Output 10 | 4-4 | Relay Output 14 |
| 1-5 | COM 0 | 2-5 | COM 1 | 3-5 | COM 2 | 4-5 | COM 3 |
| 1-6 | Relay Output 3 | 2-6 | Relay Output 7 | 3-6 | Relay Output 11 | 4-6 | Relay Output 15 |
| 1-7 | COM 0 | 2-7 | COM 1 | 3-7 | COM 2 | 4-7 | COM 3 |

### 3.2.6. AT2-R333

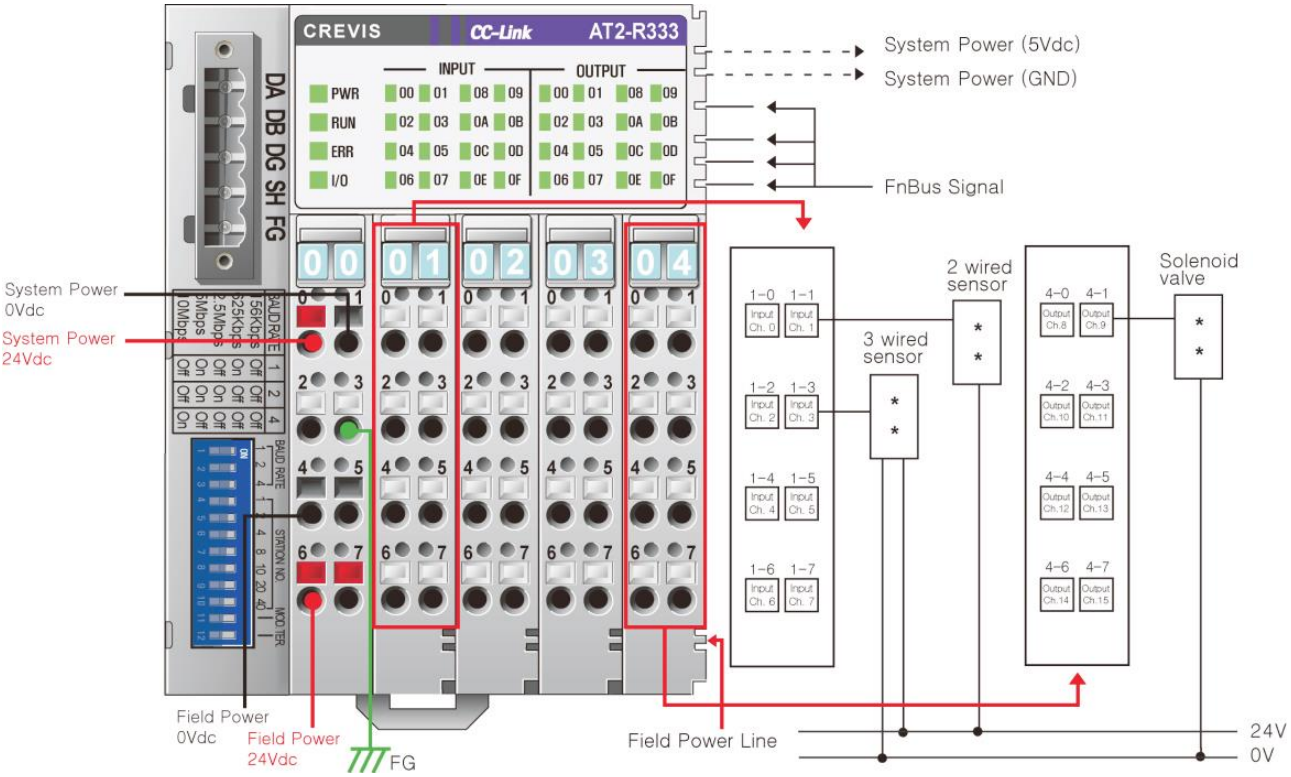


| Pin No. | Description | Pin No. | Description | Pin No. | Description | Pin No. | Description |
|---|---|---|---|---|---|---|---|
| 1-0 | Input Channel 0 | 2-0 | Input Channel 8 | 3-0 | Output Channel 0 | 4-0 | Output Channel 8 |
| 1-1 | Input Channel 1 | 2-1 | Input Channel 9 | 3-1 | Output Channel 1 | 4-1 | Output Channel 9 |
| 1-2 | Input Channel 2 | 2-2 | Input Channel 10 | 3-2 | Output Channel 2 | 4-2 | Output Channel 10 |
| 1-3 | Input Channel 3 | 2-3 | Input Channel 11 | 3-3 | Output Channel 3 | 4-3 | Output Channel 11 |
| 1-4 | Input Channel 4 | 2-4 | Input Channel 12 | 3-4 | Output Channel 4 | 4-4 | Output Channel 12 |
| 1-5 | Input Channel 5 | 2-5 | Input Channel 13 | 3-5 | Output Channel 5 | 4-5 | Output Channel 13 |
| 1-6 | Input Channel 6 | 2-6 | Input Channel 14 | 3-6 | Output Channel 6 | 4-6 | Output Channel 14 |
| 1-7 | Input Channel 7 | 2-7 | Input Channel 15 | 3-7 | Output Channel 7 | 4-7 | Output Channel 15 |

### 3.2.7. AT2-R334

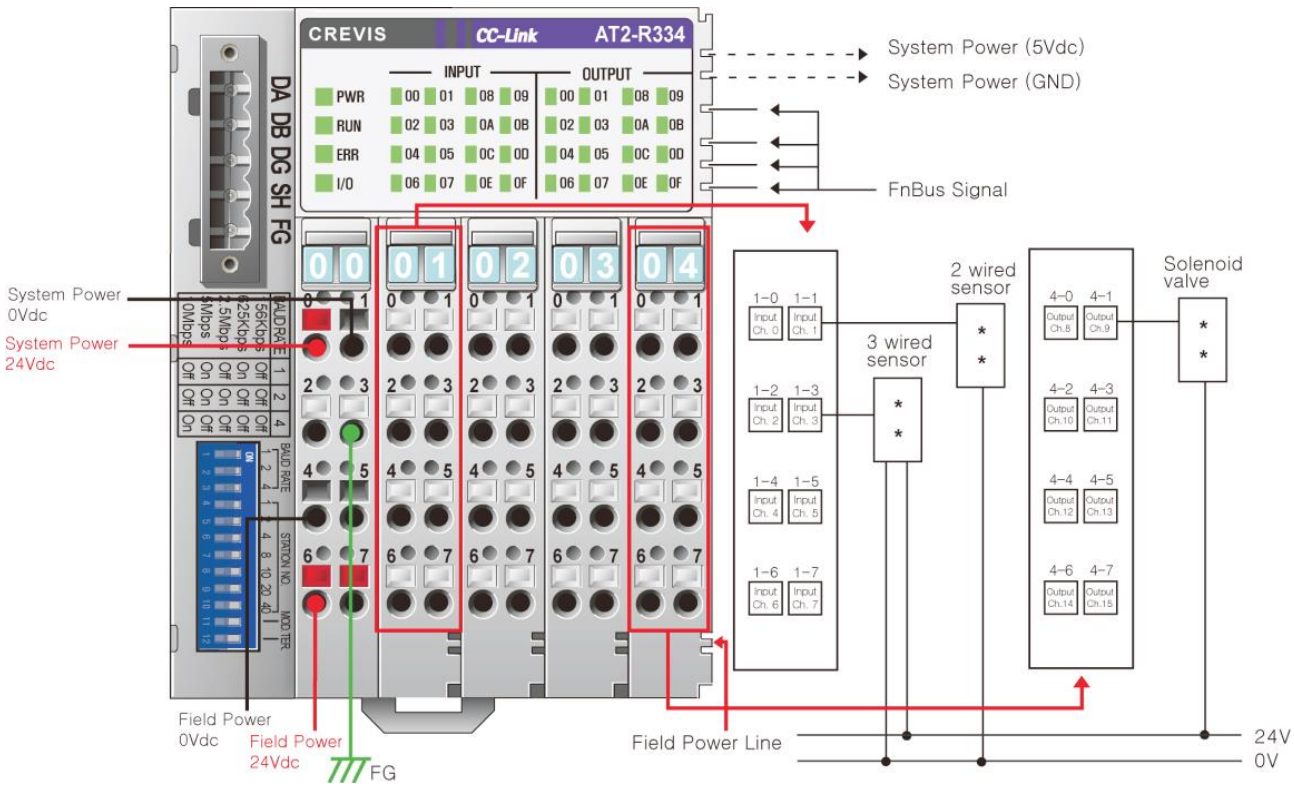


| Pin No. | Description | Pin No. | Description | Pin No. | Description | Pin No. | Description |
|---|---|---|---|---|---|---|---|
| 1-0 | Input Channel 0 | 2-0 | Input Channel 8 | 3-0 | Output Channel 0 | 4-0 | Output Channel 8 |
| 1-1 | Input Channel 1 | 2-1 | Input Channel 9 | 3-1 | Output Channel 1 | 4-1 | Output Channel 9 |
| 1-2 | Input Channel 2 | 2-2 | Input Channel 10 | 3-2 | Output Channel 2 | 4-2 | Output Channel 10 |
| 1-3 | Input Channel 3 | 2-3 | Input Channel 11 | 3-3 | Output Channel 3 | 4-3 | Output Channel 11 |
| 1-4 | Input Channel 4 | 2-4 | Input Channel 12 | 3-4 | Output Channel 4 | 4-4 | Output Channel 12 |
| 1-5 | Input Channel 5 | 2-5 | Input Channel 13 | 3-5 | Output Channel 5 | 4-5 | Output Channel 13 |
| 1-6 | Input Channel 6 | 2-6 | Input Channel 14 | 3-6 | Output Channel 6 | 4-6 | Output Channel 14 |
| 1-7 | Input Channel 7 | 2-7 | Input Channel 15 | 3-7 | Output Channel 7 | 4-7 | Output Channel 15 |

### 3.2.8. AT2-R336

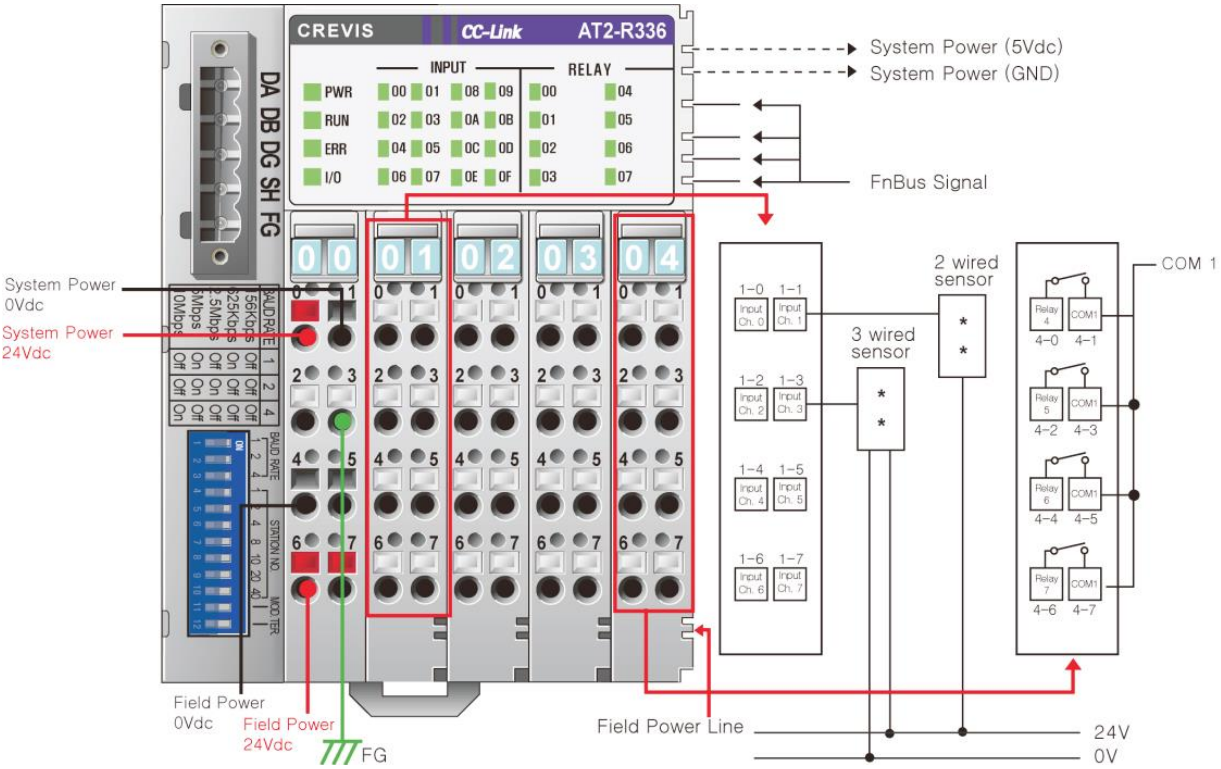


| Pin No. | Description | Pin No. | Description | Pin No. | Description | Pin No. | Description |
|---|---|---|---|---|---|---|---|
| 1-0 | Input Channel 0 | 2-0 | Input Channel 8 | 3-0 | Relay Output 0 | 4-0 | Relay Output 4 |
| 1-1 | Input Channel 1 | 2-1 | Input Channel 9 | 3-1 | COM 0 | 4-1 | COM 1 |
| 1-2 | Input Channel 2 | 2-2 | Input Channel 10 | 3-2 | Relay Output 1 | 4-2 | Relay Output 5 |
| 1-3 | Input Channel 3 | 2-3 | Input Channel 11 | 3-3 | COM 0 | 4-3 | COM 1 |
| 1-4 | Input Channel 4 | 2-4 | Input Channel 12 | 3-4 | Relay Output 2 | 4-4 | Relay Output 6 |
| 1-5 | Input Channel 5 | 2-5 | Input Channel 13 | 3-5 | COM 0 | 4-5 | COM 1 |
| 1-6 | Input Channel 6 | 2-6 | Input Channel 14 | 3-6 | Relay Output 3 | 4-6 | Relay Output 7 |
| 1-7 | Input Channel 7 | 2-7 | Input Channel 15 | 3-7 | COM 0 | 4-7 | COM 1 |

### 3.2.9. AT2-R337

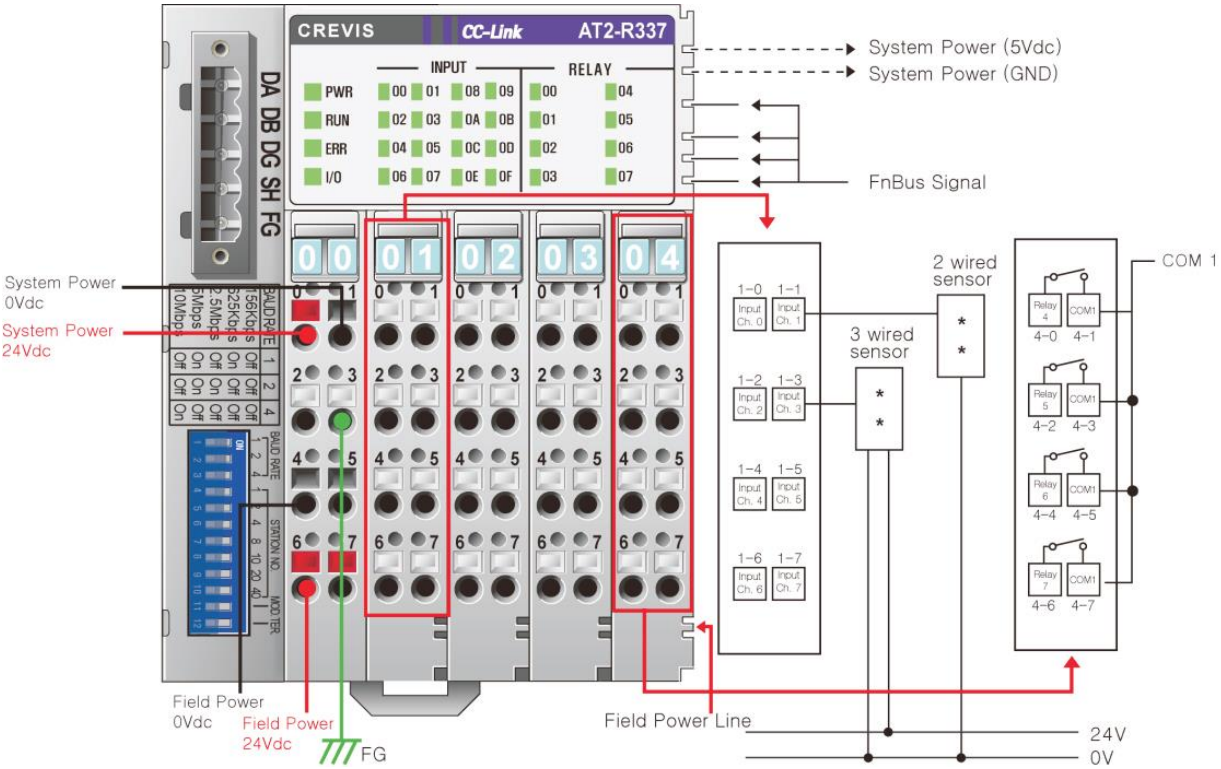


| Pin No. | Description | Pin No. | Description | Pin No. | Description | Pin No. | Description |
|---|---|---|---|---|---|---|---|
| 1-0 | Input Channel 0 | 2-0 | Input Channel 8 | 3-0 | Relay Output 0 | 4-0 | Relay Output 4 |
| 1-1 | Input Channel 1 | 2-1 | Input Channel 9 | 3-1 | COM 0 | 4-1 | COM 1 |
| 1-2 | Input Channel 2 | 2-2 | Input Channel 10 | 3-2 | Relay Output 1 | 4-2 | Relay Output 5 |
| 1-3 | Input Channel 3 | 2-3 | Input Channel 11 | 3-3 | COM 0 | 4-3 | COM 1 |
| 1-4 | Input Channel 4 | 2-4 | Input Channel 12 | 3-4 | Relay Output 2 | 4-4 | Relay Output 6 |
| 1-5 | Input Channel 5 | 2-5 | Input Channel 13 | 3-5 | COM 0 | 4-5 | COM 1 |
| 1-6 | Input Channel 6 | 2-6 | Input Channel 14 | 3-6 | Relay Output 3 | 4-6 | Relay Output 7 |
| 1-7 | Input Channel 7 | 2-7 | Input Channel 15 | 3-7 | COM 0 | 4-7 | COM 1 |

## 3.2.10. AT2-R355

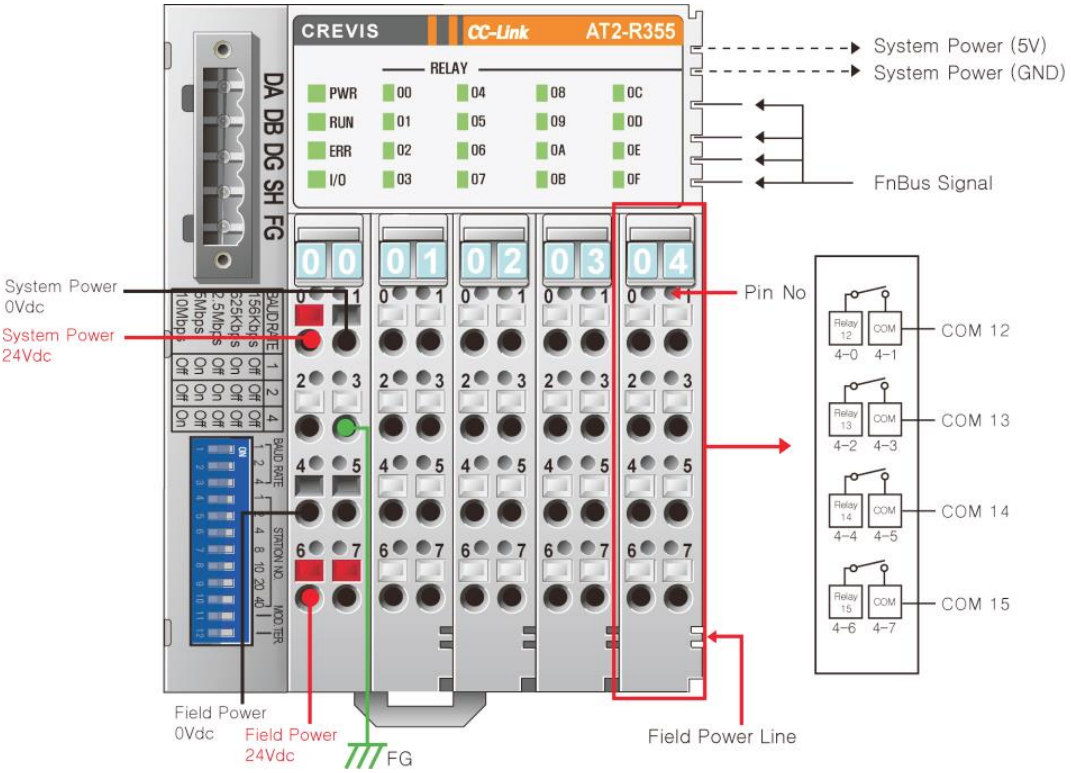


| Pin No. | Description | Pin No. | Description | Pin No. | Description | Pin No. | Description |
|---|---|---|---|---|---|---|---|
| 1-0 | Relay Output 0 | 2-0 | Relay Output 4 | 3-0 | Relay Output 8 | 4-0 | Relay Output 12 |
| 1-1 | COM 0 | 2-1 | COM 4 | 3-1 | COM 8 | 4-1 | COM 12 |
| 1-2 | Relay Output 1 | 2-2 | Relay Output 5 | 3-2 | Relay Output 9 | 4-2 | Relay Output 13 |
| 1-3 | COM 1 | 2-3 | COM 5 | 3-3 | COM 9 | 4-3 | COM 13 |
| 1-4 | Relay Output 2 | 2-4 | Relay Output 6 | 3-4 | Relay Output 10 | 4-4 | Relay Output 14 |
| 1-5 | COM 2 | 2-5 | COM 6 | 3-5 | COM 10 | 4-5 | COM 14 |
| 1-6 | Relay Output 3 | 2-6 | Relay Output 7 | 3-6 | Relay Output 11 | 4-6 | Relay Output 15 |
| 1-7 | COM 3 | 2-7 | COM 7 | 3-7 | COM 11 | 4-7 | COM 15 |

### 3.2.11. AT2-R356

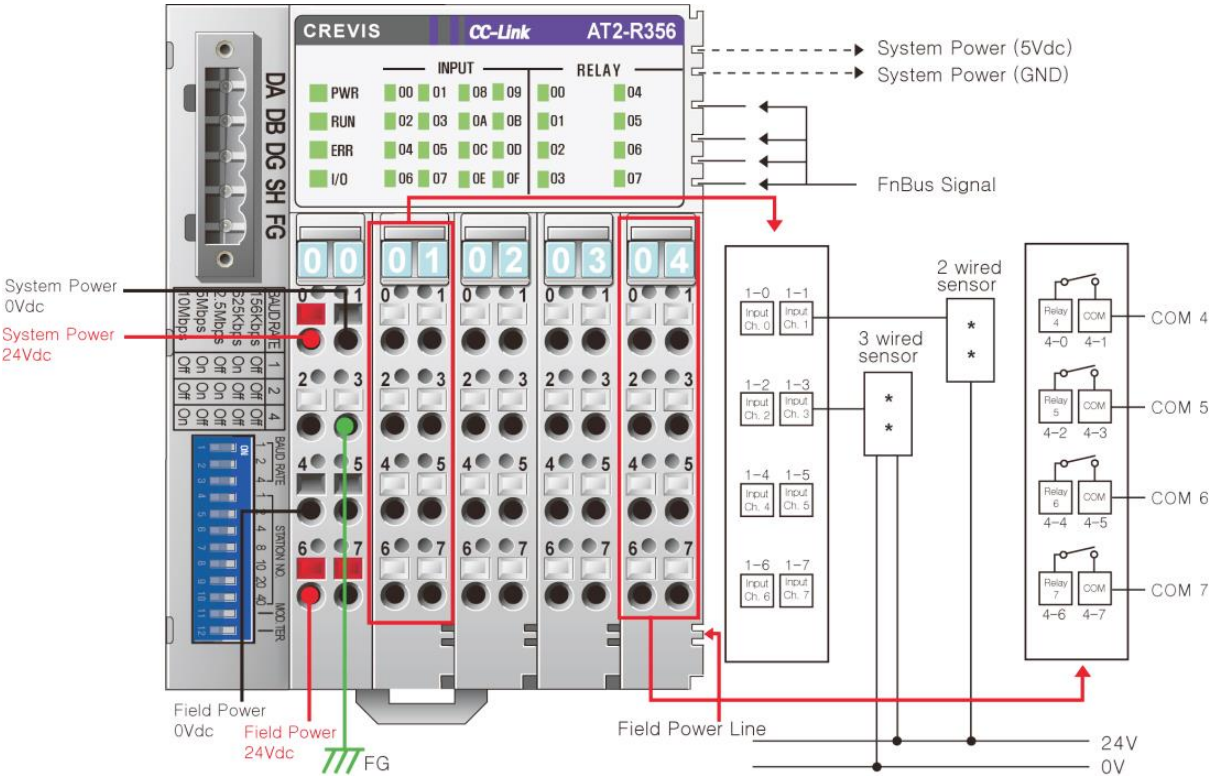


| Pin No. | Description | Pin No. | Description | Pin No. | Description | Pin No. | Description |
|---|---|---|---|---|---|---|---|
| 1-0 | Input Channel 0 | 2-0 | Input Channel 8 | 3-0 | Relay Output 0 | 4-0 | Relay Output 4 |
| 1-1 | Input Channel 1 | 2-1 | Input Channel 9 | 3-1 | COM 0 | 4-1 | COM 4 |
| 1-2 | Input Channel 2 | 2-2 | Input Channel 10 | 3-2 | Relay Output 1 | 4-2 | Relay Output 5 |
| 1-3 | Input Channel 3 | 2-3 | Input Channel 11 | 3-3 | COM 1 | 4-3 | COM 5 |
| 1-4 | Input Channel 4 | 2-4 | Input Channel 12 | 3-4 | Relay Output 2 | 4-4 | Relay Output 6 |
| 1-5 | Input Channel 5 | 2-5 | Input Channel 13 | 3-5 | COM 2 | 4-5 | COM 6 |
| 1-6 | Input Channel 6 | 2-6 | Input Channel 14 | 3-6 | Relay Output 3 | 4-6 | Relay Output 7 |
| 1-7 | Input Channel 7 | 2-7 | Input Channel 15 | 3-7 | COM 3 | 4-7 | COM 7 |

## 3.2.12. AT2-R357

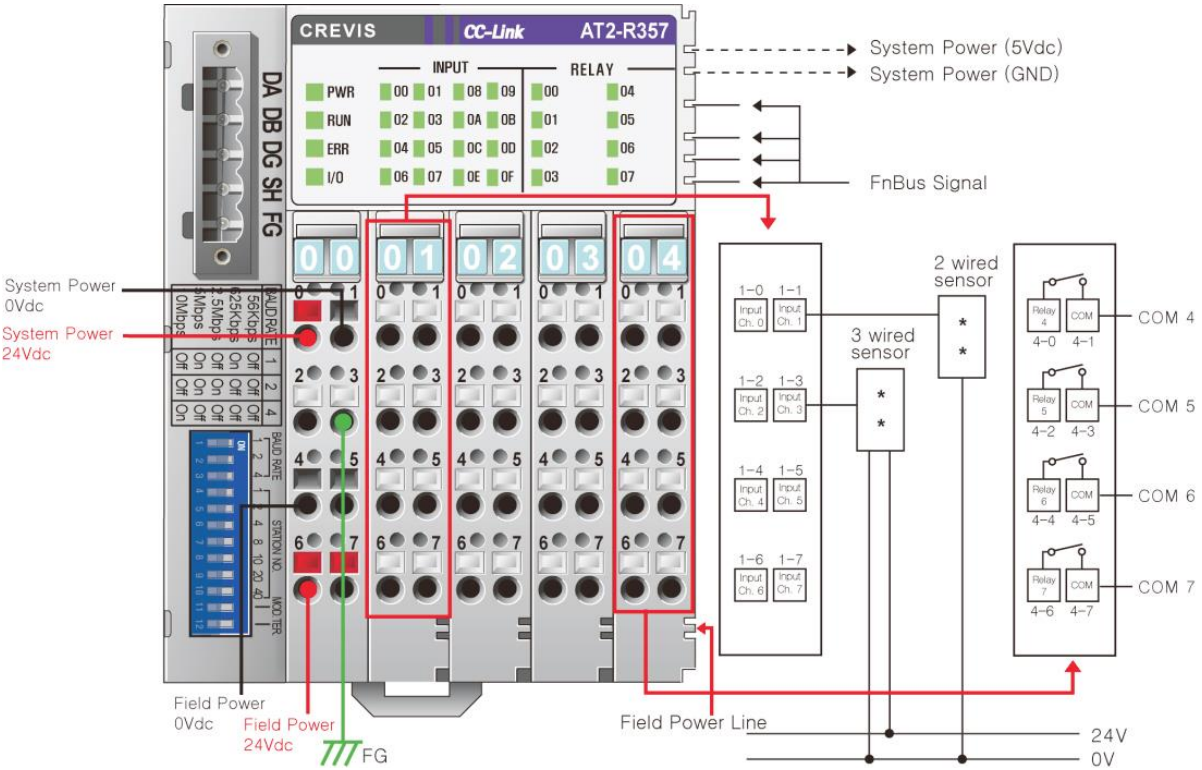


| Pin No. | Description | Pin No. | Description | Pin No. | Description | Pin No. | Description |
|---|---|---|---|---|---|---|---|
| 1-0 | Input Channel 0 | 2-0 | Input Channel 8 | 3-0 | Relay Output 0 | 4-0 | Relay Output 4 |
| 1-1 | Input Channel 1 | 2-1 | Input Channel 9 | 3-1 | COM 0 | 4-1 | COM 4 |
| 1-2 | Input Channel 2 | 2-2 | Input Channel 10 | 3-2 | Relay Output 1 | 4-2 | Relay Output 5 |
| 1-3 | Input Channel 3 | 2-3 | Input Channel 11 | 3-3 | COM 1 | 4-3 | COM 5 |
| 1-4 | Input Channel 4 | 2-4 | Input Channel 12 | 3-4 | Relay Output 2 | 4-4 | Relay Output 6 |
| 1-5 | Input Channel 5 | 2-5 | Input Channel 13 | 3-5 | COM 2 | 4-5 | COM 6 |
| 1-6 | Input Channel 6 | 2-6 | Input Channel 14 | 3-6 | Relay Output 3 | 4-6 | Relay Output 7 |
| 1-7 | Input Channel 7 | 2-7 | Input Channel 15 | 3-7 | COM 3 | 4-7 | COM 7 |

## 3.3. Environment & Communication Interface Specification

| Environmental Specifications | |
|---|---|
| Operating Temperature | -20 to 55℃ |
| Non-Operating Temperature | -40℃ to 85℃ |
| Relative Humidity | 5%~90% non-condensing |
| Operating Altitude | 2000m |
| Mounting | DIN rail |

| General Specifications | |
|---|---|
| Vibration/Shock resistance | Displacement : 0.012Inch p-p from 10~57Hz<br>Acceleration : 2G's from 57~500Hz<br>Sweep Rate : 1 octave Per Minute<br>Axes to test : x, y, z<br>Frequency Sweeps Per Axis : 10 |
| System Power | Supply Voltage: 24Vdc nominal<br>Voltage Range: 19.2~28.8Vdc<br>Protection: Output Current Limits(Min. 1.5A) Reverse Polarity Protection |
| System Power Dissipation | Max. 145mA@24Vdc |
| System Power Current for Expansion Module | Max. 400mA@5Vdc |
| EMC resistance burst/ESD | Confirms to EN-61000-6-2 |
| EMI | Confirms to EN-61000-6-4 |
| Installation Pos. /Protect. Class | Variable / IP20 |
| Product Certification | UL / cUL, CE |
| Network Conformance | AT2-R1xx : ODVA Conformance Test Completion<br>AT2-R3xx : CLPA Conformance Test Completion<br>AT2-R5xx : PTO Conformance Test Completion |
| Isolation | DC Module (Included Analog Module) : Terminal Block to F.G 500Vac/1min<br>AC Module : Terminal Block to F.G 1500Vac/1min<br>Relay Module : Terminal Block to F.G 2500Vac/1min |

| Communication Interface Specifications | |
|---|---|
| Protocol Version | Version 1 |
| Station type | Remote Device Station |
| Max. Nodes | 42 Nodes / Max |
| Max. Expansion Module | 8 Expansion slots |
| I/O Data Size | System area: 16 Points<br>RX / RY: 112 Points (4 Stations occupied)<br>RWr/RWw: 16 Words (4 Stations occupied) |
| Indicators | 4 LEDs<br>1 Green Power Status(PWR)<br>1 Green Run/Stop Status(RUN)<br>1 Red L Error Status(ERR)<br>1 Green/Red Expansion I/O Module Status (I/O) |
| Communication Rate | 156/625/2500/5000/10000 Kbps |
| Module Location | Starter module - left side of FnIO system |

## 3.4. Specification

### 3.4.1. AT2-R311

| Items | Specification |
|---|---|
| **Interface Specification** | |
| Number of Input | 32 Points, Sink Type (GND Common internally shorted) |
| Indicates | 1 LED/1Point |
| Input Voltage | Nominal 24Vdc, 11~28.8Vdc |
| Max. Off-State Voltage | 5Vdc |
| Min. On-State Voltage | 9Vdc |
| Input Signal Delay | < 0.5msec |
| Input Impedance | About 5.4KΩ |

| General Specification | |
|---|---|
| Power Dissipation | Max. 145mA @ 5.0Vdc |
| Isolation | DeviceNet to internal logic : Non-isolation<br>Internal logic to I/O driver : Isolation |
| Field Power | Supply Voltage : 24Vdc nominal<br>Supply Voltage range : 11~28.8Vdc |
| Field Power Current | Max. 6A@24Vdc |
| Weight | Max. 340g |
| Module Size | 83mm x 99mm x 70mm |
| Environment Condition | Refer to " 3.3. Environment & Communication Interface Specification” |

### 3.4.2. AT2-R312

| Items | Specification |
|---|---|
| **Interface Specification** | |
| Number of Input | 32 Points, Source Type (24V Power internally shorted) |
| Indicates | 1 LED/1Point |
| Input Voltage | Nominal 0Vdc, 11~28.8Vdc |
| Max. Off-State Voltage | 5Vdc |
| Min. On-State Voltage | 9Vdc |
| Input Signal Delay | < 0.5msec |
| Input Impedance | About 5.4KΩ |

| General Specification | |
|---|---|
| Power Dissipation | Max. 145mA @ 5.0Vdc |
| Isolation | DeviceNet to internal logic : Non-isolation<br>Internal logic to I/O driver : Isolation |
| Field Power | Supply Voltage : 24Vdc nominal<br>Supply Voltage range : 11~28.8Vdc |
| Field Power Current | Max. 6A@24Vdc |
| Weight | Max. 340g |
| Module Size | 83mm x 99mm x 70mm |
| Environment Condition | Refer to " 3.3. Environment & Communication Interface Specification” |

### 3.4.3. AT2-R321

| Items | Specification |
|---|---|
| **Interface Specification** | |
| Number of Output | 32 Points, Sink Type (GND Common internally shorted, like to TR's NPN) |
| Indicates | 1 LED/1Point |
| Output Load Current | Max. 0.5A/1pt, 8A/All |
| Output Voltage | Nominal 0Vdc, 11~28.8Vdc available |
| Drop Voltage(ON-state) | Max. 0.3Vdc |
| Leakage Current(OFF-state) | Max. 50uA |
| Output Signal Delay | < 0.3msec |
| Protection | Short protection, Over Temperature protection, Over Current Limit |

| General Specification | |
|---|---|
| Power Dissipation | Max. 145mA @ 5.0Vdc |
| Isolation | DeviceNet to internal logic : Non-isolation<br>Internal logic to I/O driver : Isolation |
| Field Power | Supply Voltage : 24Vdc nominal<br>Supply Voltage range : 11~28.8Vdc |
| Field Power Current | Max. 6A@24Vdc |
| Weight | Max. 340g |
| Module Size | 83mm x 99mm x 70mm |
| Environment Condition | Refer to " 3.3. Environment & Communication Interface Specification" |

### 3.4.4. AT2-R322

| Items | Specification |
|---|---|
| **Interface Specification** | |
| Number of Output | 32 Points, Source Type (24V Power internally shorted, like to TR's PNP) |
| Indicates | 1 LED/1Point |
| Output Load Current | Max. 0.5A/1pt, 8A/All |
| Output Voltage | Nominal 24Vdc, 11~28.8Vdc available |
| Drop Voltage(ON-state) | Max. 0.3Vdc |
| Leakage Current(OFF-state) | Max. 50uA |
| Output Signal Delay | < 0.3msec |
| Protection | Short protection, Over Temperature protection, Over Current Limit |

| General Specification | |
|---|---|
| Power Dissipation | Max. 145mA @ 5.0Vdc |
| Isolation | DeviceNet to internal logic : Non-isolation<br>Internal logic to I/O driver : Isolation |
| Field Power | Supply Voltage : 24Vdc nominal<br>Supply Voltage range : 11~28.8Vdc |
| Field Power Current | Max. 6A@24Vdc |
| Weight | Max. 340g |
| Module Size | 83mm x 99mm x 70mm |
| Environment Condition | Refer to " 3.3. Environment & Communication Interface Specification" |

### 3.4.5. AT2-R325

| Items | Specification |
|---|---|
| **Interface Specification** | |
| Number of Output | 16 Points |
| Indicates | 1 LED/1Point |
| Relay Type | Form Am Normally Open<br>Single Pole, Single Throw |
| Output Rating | 2A@5~28.8Vdc<br>0.8A@48Vdc<br>0.5A@110Vdc<br>2A@250Vac |
| Min. Load | 100uA, 100mVdc/Point |
| Max. On-State Voltage Drop | 0.5V@2.0A, Resistive Load, 24Vdc |
| Output Delay Time | On to Off: Max. 10ms<br>Off to On: Max. 10ms |
| Initial Contact Resistance | 30mΩ |
| Expected Contact Life | 300K Cycle Resistive, 100K Cycle Inductive |
| Common Type | 4 Point / 1 COM (Single Common) |
| Isolation | I/O to Logic : Relay Coil/Contact Isolation<br>1250Vrms tested |

| General Specification | |
|---|---|
| Power Dissipation | Max. 145mA @ 5.0Vdc |
| Isolation | DeviceNet to internal logic : Non-isolation<br>Internal logic to I/O driver : Isolation |
| Field Power | Supply Voltage : 24Vdc nominal<br>Supply Voltage range : 11~28.8Vdc |
| Field Power Current | Max. 6A@24Vdc |
| Weight | Max. 340g |
| Module Size | 83mm x 99mm x 70mm |
| Environment Condition | Refer to " 3.3. Environment & Communication Interface Specification” |

### 3.4.6. AT2-R333

| Items | Specification |
|---|---|
| **Interface Specification** | |
| Number of Input | 16 Points, Sink Type (GND Common internally shorted) |
| Indicates | 1 LED/1Point |
| Input Voltage | Nominal 24Vdc, 11~28.8Vdc |
| Max. Off-State Voltage | 5Vdc |
| Min. On-State Voltage | 9Vdc |
| Input Signal Delay | < 0.5msec |
| Input Impedance | About 5.4KΩ |

| | |
|---|---|
| **Interface Specification** | |
| Number of Output | 16 Points, Source Type (24V Power internally shorted, like to TR's PNP) |
| Indicates | 1 LED/1Point |
| Output Load Current | Max. 0.5A/1pt, 8A/All |
| Output Voltage | Nominal 24Vdc, 11~28.8Vdc available |
| Drop Voltage(ON-state) | Max. 0.3Vdc |
| Leakage Current(OFF-state) | Max. 50uA |
| Output Signal Delay | < 0.3msec |
| Protection | Short protection, Over Temperature protection, Over Current Limit |

| | |
|---|---|
| **General Specification** | |
| Power Dissipation | Max. 145mA @ 5.0Vdc |
| Isolation | DeviceNet to internal logic : Non-isolation<br>Internal logic to I/O driver : Isolation |
| Field Power | Supply Voltage : 24Vdc nominal<br>Supply Voltage range : 11~28.8Vdc |
| Field Power Current | Max. 6A@24Vdc |
| Weight | Max. 340g |
| Module Size | 83mm x 99mm x 70mm |
| Environment Condition | Refer to " 3.3. Environment & Communication Interface Specification" |

### 3.4.7. AT2-R334

| Items | Specification |
|---|---|
| **Interface Specification** | |
| Number of Input | 16 Points, Source Type (24V Power internally shorted) |
| Indicates | 1 LED/1Point |
| Input Voltage | Nominal 0Vdc, 11~28.8Vdc |
| Max. Off-State Voltage | 5Vdc |
| Min. On-State Voltage | 9Vdc |
| Input Signal Delay | < 0.5msec |
| Input Impedance | About 5.4KΩ |

| | |
|---|---|
| **Interface Specification** | |
| Number of Output | 16 Points, Sink Type (GND Common internally shorted) |
| Indicates | 1 LED/1Point |
| Output Load Current | Max. 0.5A/1pt, 8A/All |
| Output Voltage | Nominal 0Vdc, 11~28.8Vdc available |
| Drop Voltage(ON-state) | Max. 0.3Vdc |
| Leakage Current(OFF-state) | Max. 50uA |
| Output Signal Delay | < 0.3msec |
| Protection | Short protection, Over Temperature protection, Over Current Limit |

| | |
|---|---|
| **General Specification** | |
| Power Dissipation | Max. 110mA @ 5.0Vdc |
| Isolation | DeviceNet to internal logic : Non-isolation<br>Internal logic to I/O driver : Isolation |
| Field Power | Supply Voltage : 24Vdc nominal<br>Supply Voltage range : 11~28.8Vdc |
| Field Power Current | Max. 6A@24Vdc |
| Weight | Max. 340g |
| Module Size | 83mm x 99mm x 70mm |
| Environment Condition | Refer to " 3.3. Environment & Communication Interface Specification” |

### 3.4.8. AT2-R336

| Items | Specification |
|---|---|
| **Interface Specification** | |
| Number of Input | 16 Points, Sink Type (GND Common internally shorted) |
| Indicates | 1 LED/1Point |
| Input Voltage | Nominal 24Vdc, 11~28.8Vdc |
| Max. Off-State Voltage | 5Vdc |
| Min. On-State Voltage | 9Vdc |
| Input Signal Delay | < 0.5msec |
| Input Impedance | About 5.4KΩ |

| **Interface Specification** | |
|---|---|
| Number of Output | 8 Points |
| Indicates | 1 LED/1Point |
| Relay Type | Form Am Normally Open<br>Single Pole, Single Throw |
| Output Rating | 2A@5~28.8Vdc<br>0.8A@48Vdc<br>0.5A@110Vdc<br>2A@250Vac |
| Min. Load | 100uA, 100mVdc/Point |
| Max. On-State Voltage Drop | 0.5V@2.0A, Resistive Load, 24Vdc |
| Output Delay Time | On to Off: Max. 10ms<br>Off to On: Max. 10ms |
| Initial Contact Resistance | 30mΩ |
| Expected Contact Life | 300K Cycle Resistive, 100K Cycle Inductive |
| Common Type | 4 Point / 1 COM (Single Common) |
| Isolation | I/O to Logic : Relay Coil/Contact Isolation<br>1250Vrms tested |

| **General Specification** | |
|---|---|
| Power Dissipation | Max. 145mA @ 5.0Vdc |
| Isolation | DeviceNet to internal logic : Non-isolation<br>Internal logic to I/O driver : Isolation |
| Field Power | Supply Voltage : 24Vdc nominal<br>Supply Voltage range : 11~28.8Vdc |
| Field Power Current | Max. 6A@24Vdc |
| Weight | Max. 340g |
| Module Size | 83mm x 99mm x 70mm |
| Environment Condition | Refer to " 3.3. Environment & Communication Interface Specification” |

### 3.4.9. AT2-R337

| Items | Specification |
|---|---|
| **Interface Specification** | |
| Number of Input | 16 Points, Source Type (24V Power internally shorted) |
| Indicates | 1 LED/1Point |
| Input Voltage | Nominal 0Vdc, 11~28.8Vdc |
| Max. Off-State Voltage | 5Vdc |
| Min. On-State Voltage | 9Vdc |
| Input Signal Delay | < 0.5msec |
| Input Impedance | About 5.4KΩ |

| Interface Specification | |
|---|---|
| Number of Output | 8 Points |
| Indicates | 1 LED/1Point |
| Relay Type | Form Am Normally Open<br>Single Pole, Single Throw |
| Output Rating | 2A@5~28.8Vdc<br>0.8A@48Vdc<br>0.5A@110Vdc<br>2A@250Vac |
| Min. Load | 100uA, 100mVdc/Point |
| Max. On-State Voltage Drop | 0.5V@2.0A, Resistive Load, 24Vdc |
| Output Delay Time | On to Off: Max. 10ms<br>Off to On: Max. 10ms |
| Initial Contact Resistance | 30mΩ |
| Expected Contact Life | 300K Cycle Resistive, 100K Cycle Inductive |
| Common Type | 4 Point / 1 COM (Single Common) |
| Isolation | I/O to Logic : Relay Coil/Contact Isolation<br>1250Vrms tested |

| General Specification | |
|---|---|
| Power Dissipation | Max. 145mA @ 5.0Vdc |
| Isolation | DeviceNet to internal logic : Non-isolation<br>Internal logic to I/O driver : Isolation |
| Field Power | Supply Voltage : 24Vdc nominal<br>Supply Voltage range : 11~28.8Vdc |
| Field Power Current | Max. 6A@24Vdc |
| Weight | Max. 340g |
| Module Size | 83mm x 99mm x 70mm |
| Environment Condition | Refer to " 3.3. Environment & Communication Interface Specification” |

### 3.4.10. AT2-R355

| Items | Specification |
|---|---|
| **Interface Specification** | |
| Number of Output | 16 Points |
| Indicates | 1 LED/1Point |
| Relay Type | Form Am Normally Open<br>Single Pole, Single Throw |
| Output Rating | 2A@5~28.8Vdc<br>0.8A@48Vdc<br>0.5A@110Vdc<br>2A@250Vac |
| Min. Load | 100uA, 100mVdc/Point |
| Max. On-State Voltage Drop | 0.5V@2.0A |
| Output Delay Time | On to Off: Max. 10ms<br>Off to On: Max. 10ms |
| Initial Contact Resistance | 30mΩ |
| Expected Contact Life | 300K Cycle Resistive, 100K Cycle Inductive |
| Common Type | 1 Point / 1 COM (Single Common) |
| Isolation | I/O to Logic : Relay Coil/Contact Isolation<br>1250Vrms tested |

| General Specification | |
|---|---|
| Power Dissipation | Max. 145mA @ 5.0Vdc |
| Isolation | DeviceNet to internal logic : Non-isolation<br>Internal logic to I/O driver : Isolation |
| Field Power | Supply Voltage : 24Vdc nominal<br>Supply Voltage range : 11~28.8Vdc |
| Field Power Current | Max. 6A@24Vdc |
| Weight | Max. 340g |
| Module Size | 83mm x 99mm x 70mm |
| Environment Condition | Refer to " 3.3. Environment & Communication Interface Specification” |

### 3.4.11. AT2-R356

| Items | Specification |
|---|---|
| **Interface Specification** | |
| Number of Input | 16 Points, Sink Type (GND Common internally shorted) |
| Indicates | 1 LED/1Point |
| Input Voltage | Nominal 24Vdc, 11~28.8Vdc |
| Max. Off-State Voltage | 5Vdc |
| Min. On-State Voltage | 9Vdc |
| Input Signal Delay | < 0.5msec |
| Input Impedance | About 5.4KΩ |

| **Interface Specification** | |
|---|---|
| Number of Output | 8 Points |
| Indicates | 1 LED/1Point |
| Relay Type | Form Am Normally Open<br>Single Pole, Single Throw |
| Output Rating | 2A@5~28.8Vdc<br>0.8A@48Vdc<br>0.5A@110Vdc<br>2A@250Vac |
| Min. Load | 100uA, 100mVdc/Point |
| Max. On-State Voltage Drop | 0.5V@2.0A, Resistive Load, 24Vdc |
| Output Delay Time | On to Off: Max. 10ms<br>Off to On: Max. 10ms |
| Initial Contact Resistance | 30mΩ |
| Expected Contact Life | 300K Cycle Resistive, 100K Cycle Inductive |
| Common Type | 1 Point / 1 COM (Single Common) |
| Isolation | I/O to Logic : Relay Coil/Contact Isolation<br>1250Vrms tested |

| **General Specification** | |
|---|---|
| Power Dissipation | Max. 145mA @ 5.0Vdc |
| Isolation | DeviceNet to internal logic : Non-isolation<br>Internal logic to I/O driver : Isolation |
| Field Power | Supply Voltage : 24Vdc nominal<br>Supply Voltage range : 11~28.8Vdc |
| Field Power Current | Max. 6A@24Vdc |
| Weight | Max. 340g |
| Module Size | 83mm x 99mm x 70mm |
| Environment Condition | Refer to " 3.3. Environment & Communication Interface Specification” |

### 3.4.12. AT2-R357

| Items | Specification |
|---|---|
| **Interface Specification** | |
| Number of Input | 16 Points, Source Type (24V Power internally shorted) |
| Indicates | 1 LED/1Point |
| Input Voltage | Nominal 0Vdc, 11~28.8Vdc |
| Max. Off-State Voltage | 5Vdc |
| Min. On-State Voltage | 9Vdc |
| Input Signal Delay | < 0.5msec |
| Input Impedance | About 5.4KΩ |

| **Interface Specification** | |
|---|---|
| Number of Output | 8 Points |
| Indicates | 1 LED/1Point |
| Relay Type | Form Am Normally Open<br>Single Pole, Single Throw |
| Output Rating | 2A@5~28.8Vdc<br>0.8A@48Vdc<br>0.5A@110Vdc<br>2A@250Vac |
| Min. Load | 100uA, 100mVdc/Point |
| Max. On-State Voltage Drop | 0.5V@2.0A, Resistive Load, 24Vdc |
| Output Delay Time | On to Off: Max. 10ms<br>Off to On: Max. 10ms |
| Initial Contact Resistance | 30mΩ |
| Expected Contact Life | 300K Cycle Resistive, 100K Cycle Inductive |
| Common Type | 1 Point / 1 COM (Single Common) |
| Isolation | I/O to Logic : Relay Coil/Contact Isolation<br>1250Vrms tested |

| **General Specification** | |
|---|---|
| Power Dissipation | Max. 145mA @ 5.0Vdc |
| Isolation | DeviceNet to internal logic : Non-isolation<br>Internal logic to I/O driver : Isolation |
| Field Power | Supply Voltage : 24Vdc nominal<br>Supply Voltage range : 11~28.8Vdc |
| Field Power Current | Max. 6A@24Vdc |
| Weight | Max. 340g |
| Module Size | 83mm x 99mm x 70mm |
| Environment Condition | Refer to " 3.3. Environment & Communication Interface Specification” |

# 4. Dimension

## 4.1. AT2-R3xx

(mm)

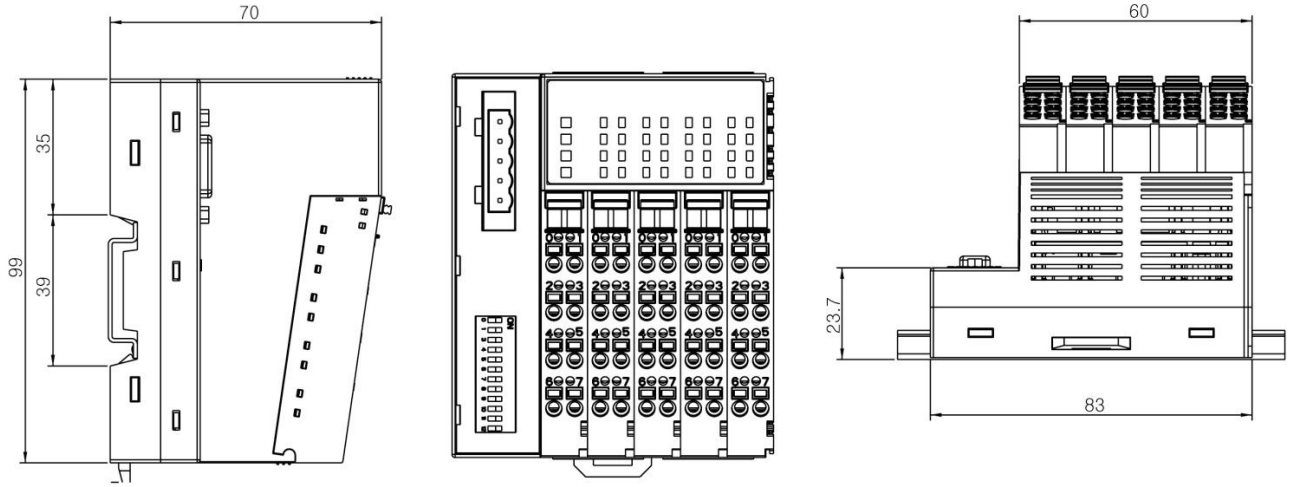

# 5. Mechanical Set Up

## 5.1. Total Expansion

The number of the module assembly that can be connected is 8. So the maximum length is 179mm Exception ST-2748 is excepted to calculate maximum length because that is double width module.

## 5.2. Plugging and Removal of the Components.

| | |
|---|---|
| DANGER | Before work is done on the components, the voltage supply must be turned off.<br>Make sure pull up the locker first as the picture above and then pull down after install the module on DIN rail. |

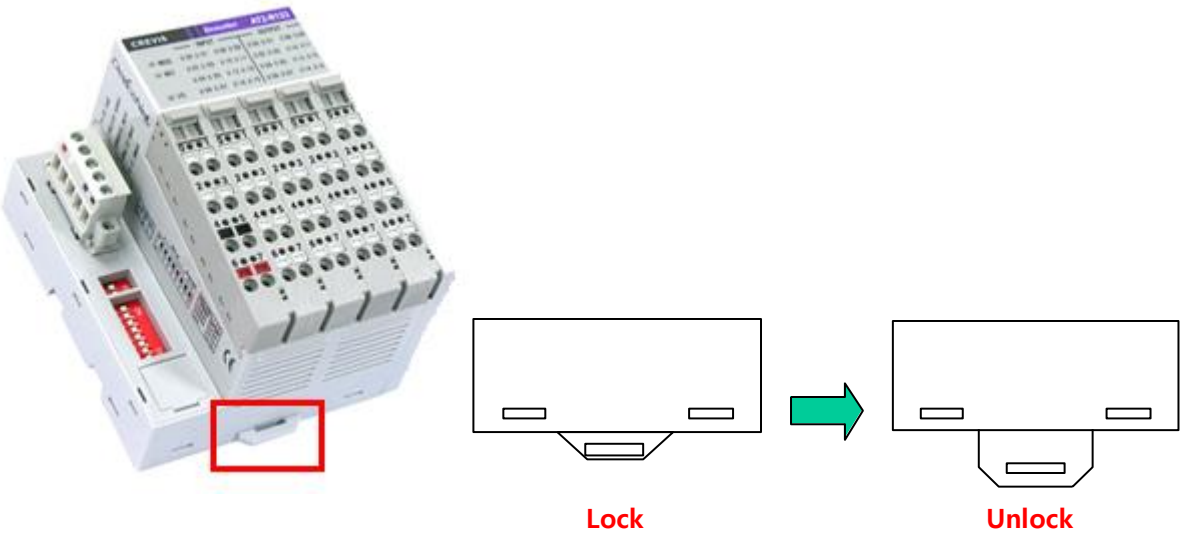


Use a small-bladed screwdriver to lift up Locker. Install the Module on Din rail firmly. Lift down locker to lock. To remove the modules please repeat it in opposite sequence.

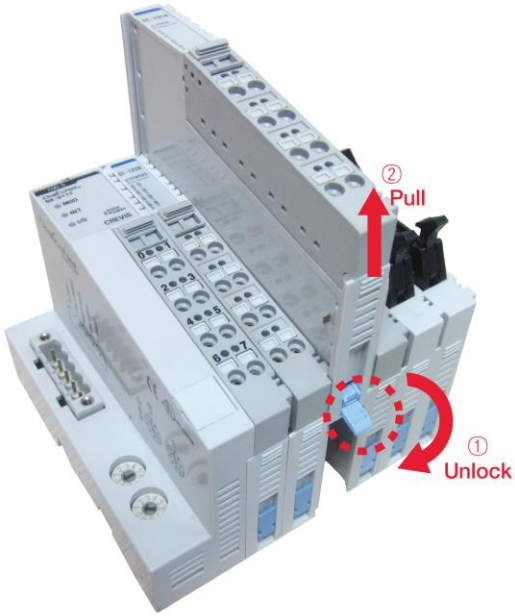


## 5.3. Internal FnBUS/Field Power Contacts

Communication between the NA series and the expansion module as well as system / field power supply of the bus modules is carried out via the internal bus. It is comprised of 6 data pin and 2 field power pin.

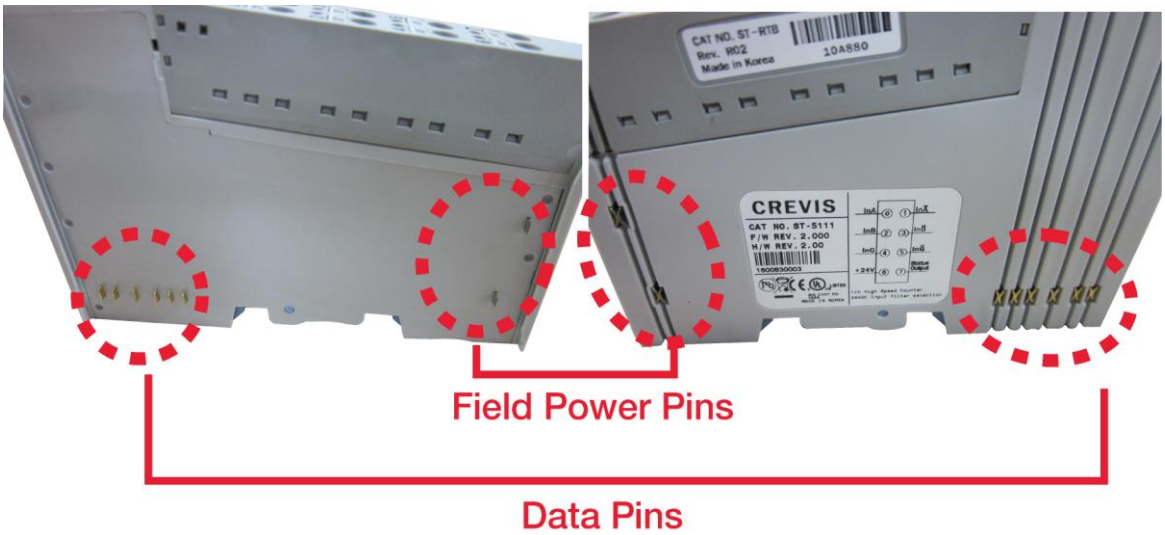


| | |
|---|---|
| DANGER | Do not touch data and field power pins in order to avoid soiling and damage by ESD noise. |

# 6. Configuration and Operation

## 6.1. FnBus Specification

### 6.1.1. FnBus System

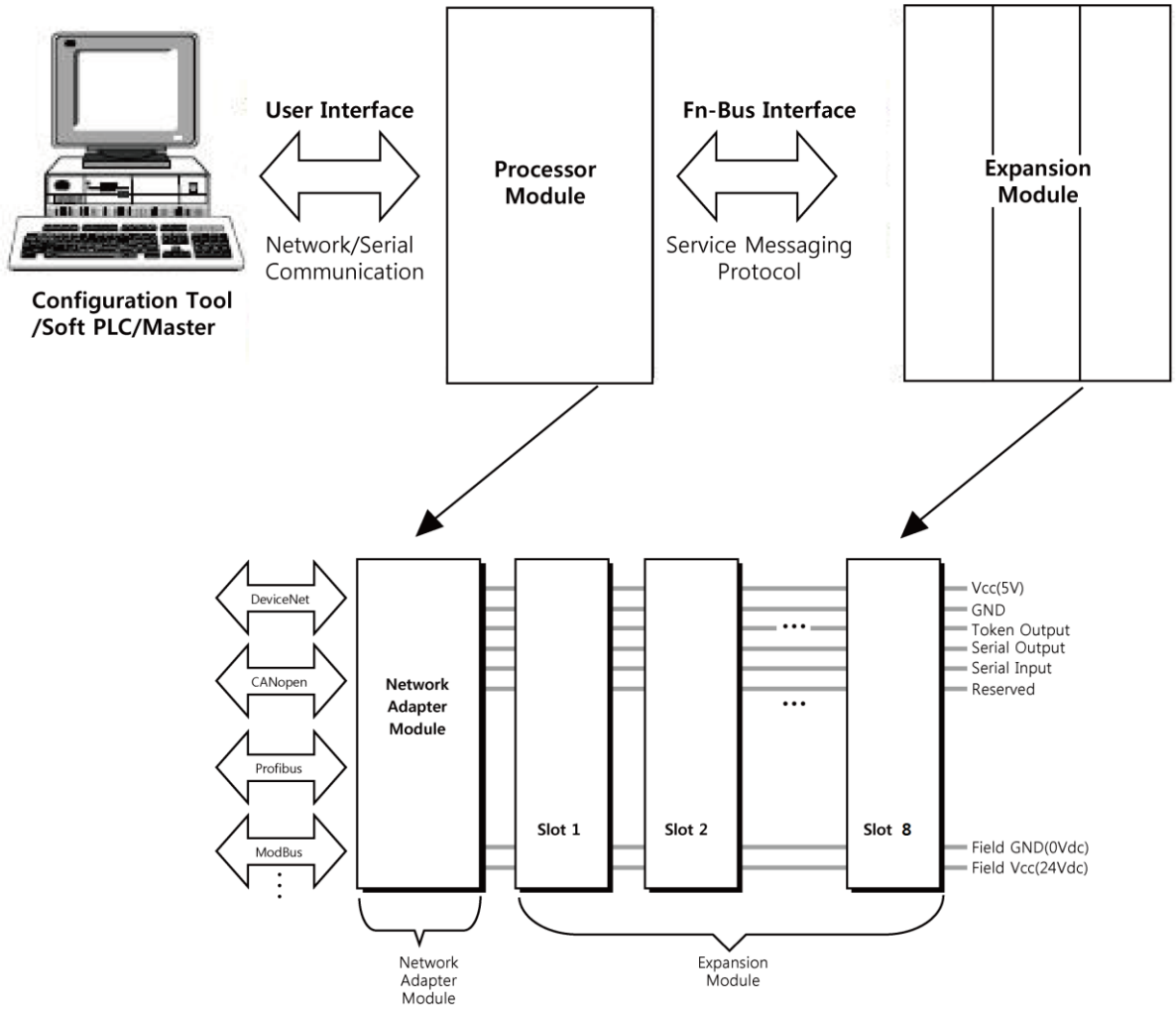

**• Network Adapter Module**

The Network Adapter Module forms the link between the field bus and the field devices with the Expansion Modules.

The connection to different field bus systems can be established by each of the corresponding Network Adapter Module, e.g. for SyncNet, PROFIBUS, CANopen, DeviceNet, Ethernet/IP, CC-Link, MODBUS/Serial, MODBUS/TCP etc.

**• Expansion Module**

The Expansion Modules are supported a variety of input and output field devices.

There are digital and analog input/output modules and special function modules.

**• Two types of FnBus Message**

- Service Messaging
- I/O Messaging

### 6.1.2. FnBus Pin Description

| No. | Name | Description |
|---|---|---|
| 1 | Vcc | System supply voltage (5V dc). |
| 2 | GND | System Ground. |
| 3 | Token Output | Token output port of Processor module. |
| 4 | Serial Output | Transmitter output port of Processor module. |
| 5 | Serial Input | Receiver input port of Processor module. |
| 6 | Reserved | Reserved for bypass Token. |
| 7 | Field GND | Field Ground. |
| 8 | Field Vcc | Field supply voltage (24Vdc). |

## 6.2. I/O Process Image Map

An expansion module may have 3 types of data as I/O data, configuration parameter and memory register.
The data exchange between network adapter and expansion modules is done via an I/O process image data by FnBus protocol. The following figure shows the data flow of process image between network adapter and expansion modules.

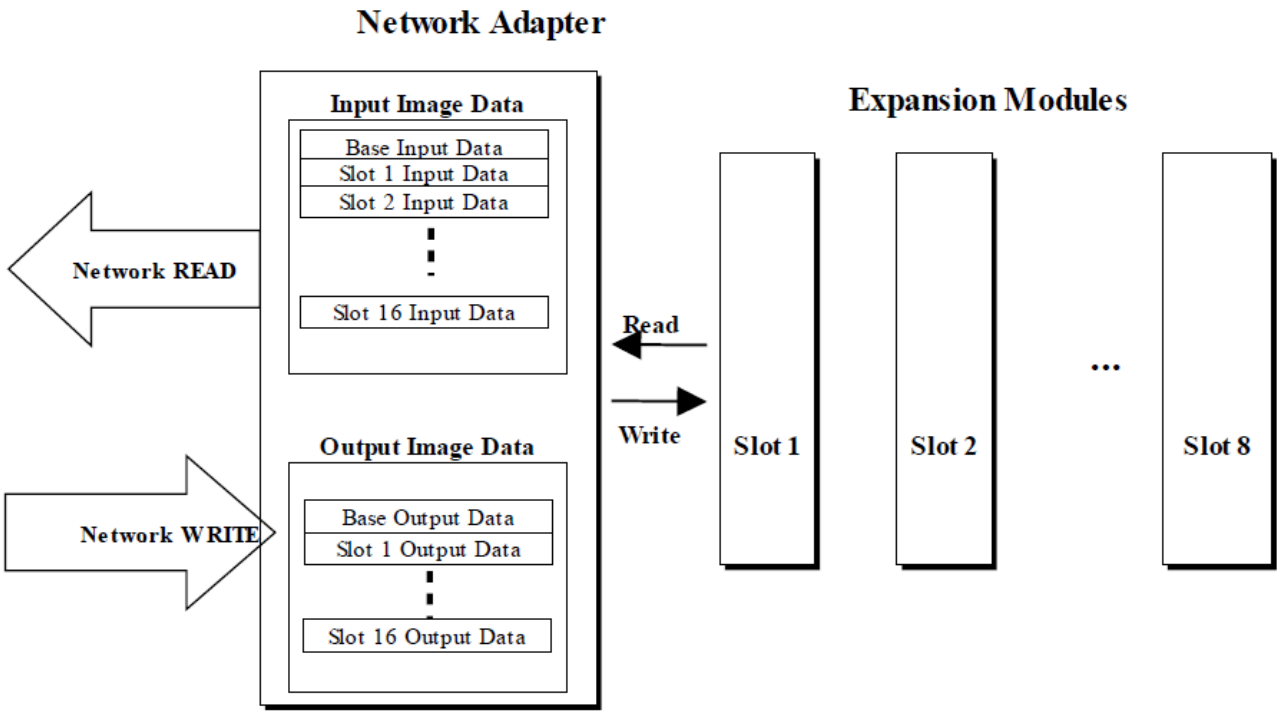

### 6.2.1. Remote Input Area

| Address | Setting | Size | Signal Name |
|---|---|---|---|
| RXm 0 ~ RXm F | Occupying 1 Station | 2 Bytes | Discrete Input |
| RX(m+1) 0 ~ RX(m+1) F | Occupying 2 Station | 6 Bytes | |
| RX(m+2) 0 ~ RX(m+2) F | | | |
| RX(m+3) 0 ~ RX(m+3) F | Occupying 3 Station | 10 Bytes | |
| RX(m+4) 0 ~ RX(m+4) F | | | |
| RX(m+5) 0 ~ RX(m+5) F | Occupying 4 Station | 14 Bytes | |
| RX(m+6) 0 ~ RX(m+6) F | | | |
| RX(m+n) 0 ~ RX(m+n) F | N = 1, 3, 5, 7<br>(1, 2, 3, 4 Station) | 2 Bytes | System Area |

- ✓ m: Register number that was introduced by head station number.
- ✓ n: Final register number for occupied number
- ✓ 1 station: 16 Point (n=1)
- ✓ 2 station: 48 Point (n=3)
- ✓ 3 station: 80 Point (n=5)
- ✓ 4 station: 112 point (n=7)

* When Mode Switch is ON, the IO size will be increased 2 bytes more respectively.

### 6.2.2. Remote Output Area

| Address | Setting | Size | Signal Name |
|---|---|---|---|
| RYm 0 ~ RYm F | Occupying 1 Station | 2 Bytes | Discrete Output |
| RY(m+1) 0 ~ RY(m+1) F | Occupying 2 Station | 6 Bytes | |
| RY(m+2) 0 ~ RY(m+2) F | | | |
| RY(m+3) 0 ~ RY(m+3) F | Occupying 3 Station | 10 Bytes | |
| RY(m+4) 0 ~ RY(m+4) F | | | |
| RY(m+5) 0 ~ RY(m+5) F | Occupying 4 Station | 14 Bytes | |
| RY(m+6) 0 ~ RY(m+6) F | | | |
| RY(m+n) 0 ~ RY(m+n) F | N = 1, 3, 5, 7<br>(1, 2, 3, 4 Station) | 2 Bytes | System Area |

### 6.2.3. RWr / RWw Area

| Address | Setting | Size | Signal name | Address | Setting | Size | Signal name |
|---|---|---|---|---|---|---|---|
| RWrm 0 | 1 Station | 4 Words | Analog Input | RWwm 0 | 1 Station | 4 Words | Analog Output |
| … | | | | … | | | |
| RWrm 3 | | | | RWwm 3 | | | |
| RWrm 4 | 2 Station | 8 Words | | RWwm 4 | 2 Station | 8 Words | |
| … | | | | … | | | |
| RWrm 7 | | | | RWwm 7 | | | |
| RWrm 8 | 3 Station | 12 Words | | RWwm 8 | 3 Station | 12 Words | |
| … | | | | … | | | |
| RWrm 11 | | | | RWwm 11 | | | |
| RWrm 12 | 4 Station | 16 Words | | RWwm 12 | 4 Station | 16 Words | |
| … | | | | … | | | |
| RWrm 15 | | | | RWwm 15 | | | |
| … | | | | … | | | |
| RWrm 127 | | | | RWwm 127 | | | |

### 6.2.4. System Area

| Link Area | Signal name | Link Area | Signal name |
|---|---|---|---|
| RX(m+n) 0 | **Reaction on Network Error** | RY(m+n) 0 | **Reaction on Network Error** |
| RX(m+n) 1 | **Reaction on Network Error** | RY(m+n) 1 | **Reaction on Network Error** |
| RX(m+n) 2 | Reserved | RY(m+n) 2 | Reserved |
| RX(m+n) 3 | Reserved | RY(m+n) 3 | Reserved |
| RX(m+n) 4 | Reserved | RY(m+n) 4 | Reserved |
| RX(m+n) 5 | Reserved | RY(m+n) 5 | Reserved |
| RX(m+n) 6 | **Msg service ready** | RY(m+n) 6 | **Msg service ready** |
| RX(m+n) 7 | **Msg response completed** | RY(m+n) 7 | **Msg response completed** |
| RX(m+n) 8 | Reserved | RY(m+n) 8 | Reserved |
| RX(m+n) 9 | **Initial data setting completion** | RY(m+n) 9 | **Initial data setting completion** |
| RX(m+n) A | **Error status flag** | RY(m+n) A | **Error status flag** |
| RX(m+n) B | **Remote station is ready** | RY(m+n) B | **Remote station is ready** |
| RX(m+n) C | Reserved | RY(m+n) C | Reserved |
| RX(m+n) D | Reserved | RY(m+n) D | Reserved |
| RX(m+n) E | **Defined by OS** | RY(m+n) E | **Defined by OS** |
| RX(m+n) F | **Defined by OS** | RY(m+n) F | **Defined by OS** |

* Option : When MOD Switch value is ‘0’, the system area is available.

- **Service message request**

| Address | High Byte | Low Byte | Stations |
|---|---|---|---|
| RWw[0] | Slot Number | Service code<br>- Read Parameter : 2<br>- Write Parameter : 3<br>- Read Memory : 4<br>- Write Memory : 5 | 1 Station |
| RWw[1] | Offset | | |
| RWw[2] | User Data 0 | User Data Length | |
| RWw[3] | User Data 2 | User Data 1 | |
| RWw[4] | User Data 4 | User Data 3 | 2 Stations |
| RWw[5] | User Data 6 | User Data 5 | |
| RWw[6] | User Data 8 | User Data 7 | |
| RWw[7] | User Data 10 | User Data 9 | |
| RWw[8] | User Data 12 | User Data 11 | 3 Stations |
| RWw[9] | User Data 14 | User Data 13 | |
| RWw[10] | User Data 16 | User Data 15 | |
| RWw[11] | User Data 18 | User Data 17 | |
| RWw[12] | User Data 20 | User Data 19 | 4 Stations |
| RWw[13] | User Data 22 | User Data 21 | |
| RWw[14] | User Data 24 | User Data 23 | |
| RWw[15] | User Data 26 | User Data 25 | |

- **Service message response**

| Address | High Byte | Low Byte | Stations |
|---|---|---|---|
| RWr[0] | Slot Number | Service code<br>- Read Parameter : 2<br>- Write Parameter : 3<br>- Read Memory : 4<br>- Write Memory : 5 | 1 Station |
| RWr[1] | Offset | | |
| RWr[2] | User Data 0 | User Data Length | |
| RWr[3] | User Data 2 | User Data 1 | |
| RWr[4] | User Data 4 | User Data 3 | 2 Stations |
| RWr[5] | User Data 6 | User Data 5 | |
| RWr[6] | User Data 8 | User Data 7 | |
| RWr[7] | User Data 10 | User Data 9 | |
| RWr[8] | User Data 12 | User Data 11 | 3 Stations |
| RWr[9] | User Data 14 | User Data 13 | |
| RWr[10] | User Data 16 | User Data 15 | |
| RWr[11] | User Data 18 | User Data 17 | |
| RWr[12] | User Data 20 | User Data 19 | 4 Stations |
| RWr[13] | User Data 22 | User Data 21 | |
| RWr[14] | User Data 24 | User Data 23 | |
| RWr[15] | User Data 26 | User Data 25 | |

- **Reaction on Network Error**

| RY(m+n) 1 | RY(m+n) 0 | Description |
|---|---|---|
| 0 | 0 | Hold last value |
| 0 | 1 | Clear outputs to zero (default) |
| 1 | 0 | Stop the FnBus<br>- Each expansion module reacts according to its parameter<br>- Internal I/O clears |
| 1 | 1 | Not used (internally switched to 10) |

- **RX(m+n) 9 / RY(m+n) 9: Initial data setting completion / request flag**

This is used if there is a request from the user sequence for initial setting on the AT2 station.
**Note:** Linked with RX(m+n)B (Slave station ready)

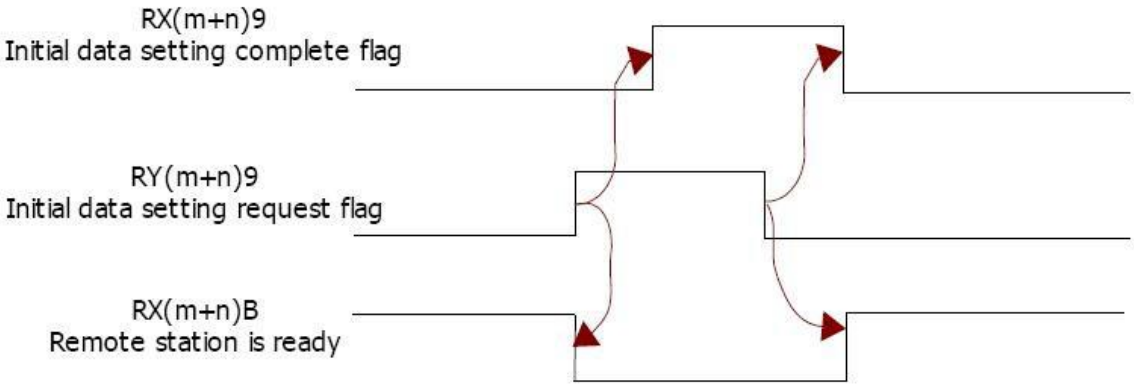


- **Message service**

✓ RWw[0] Low: Service code
✓ 2: Read Parameter
✓ 3: Write Parameter
✓ 4: Read Memory
✓ 5: Write Memory
✓ RWw[0] High: Slot number
✓ RWw[1] Low: Offset low
✓ RWw[1] High: Offset high
✓ RWw[2] Low: User data length
✓ RWw[2] High: User data[0]
✓ RWw[3] Low: User data[1]
✓ RWw[3] High: User data[2]

## 6.3. CC-Link Module(AT2-R3xx) Installation

### 6.3.1. CC-Link Cable Specification

- **Communication Cable Specification**

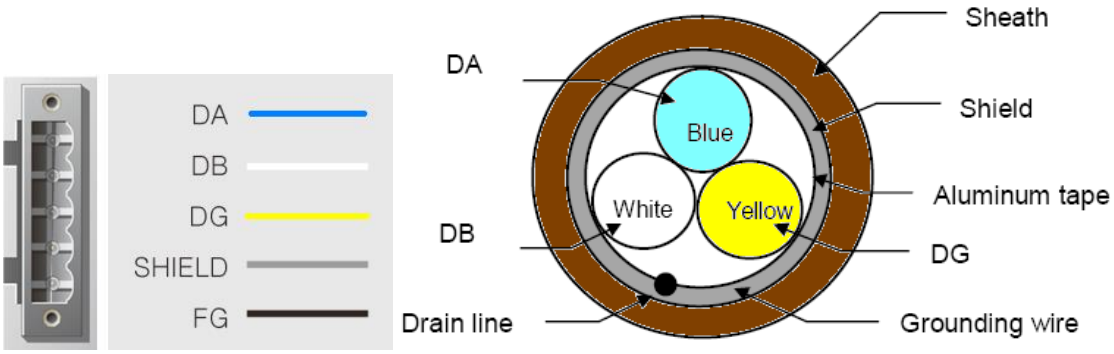


CC-Link dedicated cable shall be used in CC-Link system. Specification of CC-Link dedicated cable is as follow.

| Item | | Specifications |
|---|---|---|
| Cable Type | | Shield twisted cable |
| Finish outer diameter | | 8.0mm or less |
| Drain line | | 20 lines/0.18 mm or 24 lines/0.18mm<br>Insert separately or in a bundle between the ground cable bundle and aluminum tape. |
| Conductor resistance (20℃) | | 37.8Ω/km |
| Insulation resistance | | 10000MΩ · km or more |
| Withstand voltage | | 500VDC 1minute |
| Electrostatic capacity(1kHz) | | 60nF/km or less |
| Characteristic impedance | 1 MHz | 110±15Ω |
| | 5 MHz | 110±6Ω |
| Attenuation amount | 1 MHz | 1.6dB/100mor less |
| | 5 MHz | 3.5dB/100mor less |

CC-Link network power is 24V. Network and I/O field power must be separated. One power is provided per network.

| | |
|---|---|
| **ATTENTION** | The use of an incorrect supply voltage or frequency can cause severe damage to the component. |

## 6.3.2. Minimum radius of bending cable

Please keep the minimum radius of bending in using CC-Link dedicated cable.
When it is used with less than min. radius by constraint, it may cause pulling out from connector and cable, breaking of cable, etc..

| | | |
|---|---|---|
| Minimum radius of Bending cable | Connecting | Major diameter of cable ×10 or more |
| | Stable | Major diameter of cable ×4 or more |

connecting : Minimum radius of bending cable permitted in only connecting
stable : Minimum radius of bending cable at stable permits the characteristic for long period.

## 6.3.3. Connector

Recommended specifications of connector relaying between CC-Link dedicated cables are as followings.

- **M12(Micro) type(4 cores)**

| | M12 (Micro) Type | Pin Position |
|---|---|---|
| Resistance of conductor | 5mΩ or less | 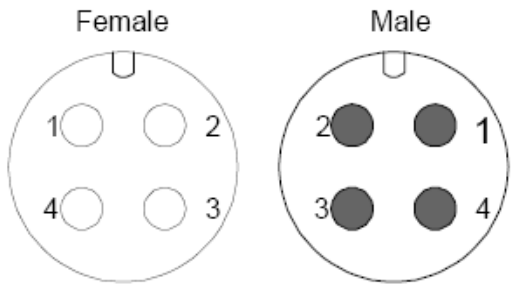  |
| Thickness of Gold plate | 0.1 μm or more | |
| Type of water proof | IP67 (JIS C 0920) | |
| Pin Position | 1 pin : SLD<br>2 pin : DB<br>3 pin : DG<br>4 pin : DA | |

- **Easy connection water proof type (4 cores)**

| | Easy connection water proof type | Pin Position |
|---|---|---|
| Resistance of conductor | 5mΩ or less | 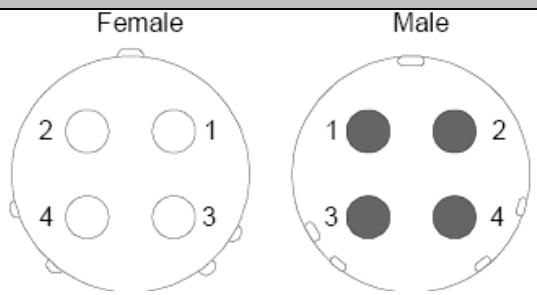  |
| Thickness of Gold plate | 0.5 μm or more | |
| Type of water proof | IP67 (JIS C 0920) | |
| 4 conductors | 1 pin : SLD<br>2 pin : DB<br>3 pin : DG<br>4 pin : DA | |

## 6.4. CC-Link Module(AT2-R3xx)Configuration

### 6.4.1. Terminator Resistor Specification

ON : Terminator Resistor Set
OFF : Terminator Resistor Non-set

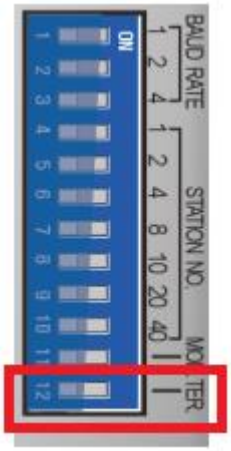


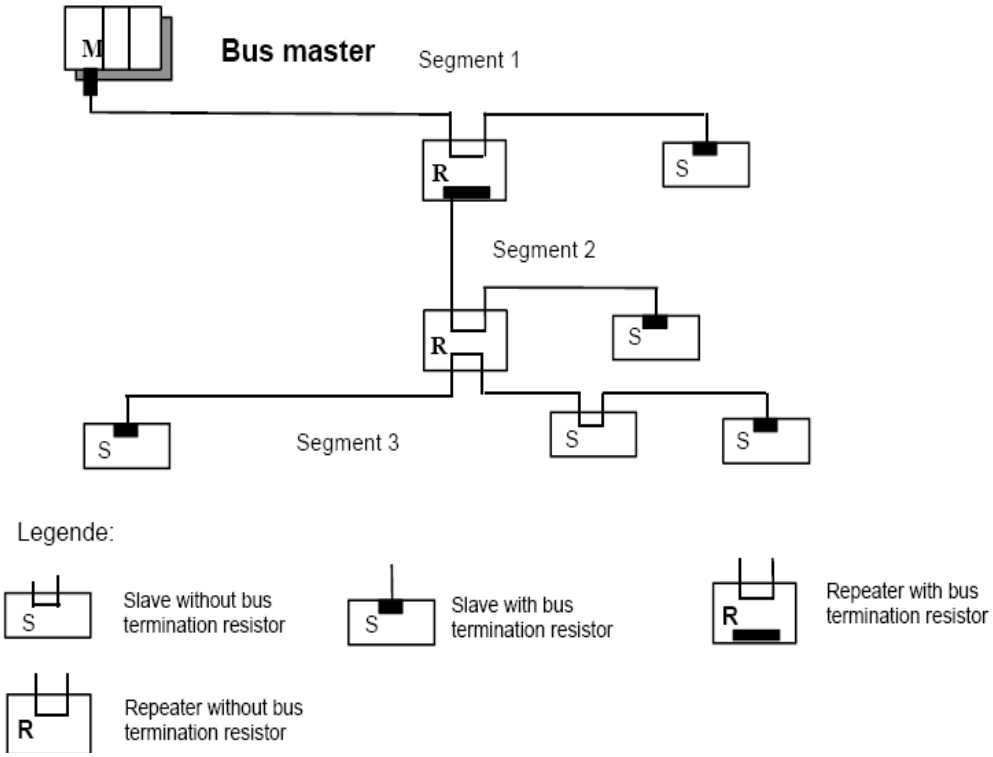

## 6.4.2. Baudrate and Station No., MODE Setup

Each CC-Link Adapter must have an unique Node Station Address (from 0 to 42) so that it can be addressed independently from other nodes. Switch value at Power-On is used to setup Module's CC-Link Communication.

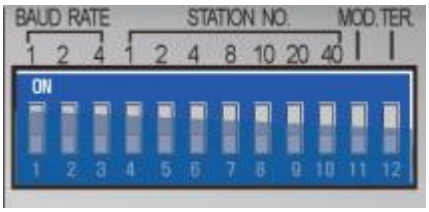


* When the terminal resistor (TER) is ON, do not connect any additional TER outside.

- **Station Number and Baudrate setting**

| Item | Item Description | DIP Switch Pole # | | | | | | | | | |
|---|---|---|---|---|---|---|---|---|---|---|---|
| | | #1 | #2 | #3 | #4(1) | #5(2) | #6(4) | #7(8) | #8(10) | #9(20) | #10(40) |
| Station Number | Ex) ID = 0 | | | | OFF | OFF | OFF | OFF | OFF | OFF | OFF |
| | Ex) ID = 1 | | | | **ON** | OFF | OFF | OFF | OFF | OFF | OFF |
| | Ex) ID = 10 | | | | OFF | OFF | OFF | OFF | **ON** | OFF | OFF |
| | Ex) ID = 42 | | | | OFF | **ON** | OFF | OFF | OFF | OFF | **ON** |
| Baudrate | **Auto Addressing** | | | | | | | | | | |
| | 156 Kbps | OFF | OFF | OFF | | | | | | | |
| | 625 Kbps | **ON** | OFF | OFF | | | | | | | |
| | 2.5 Mbps | OFF | **ON** | OFF | | | | | | | |
| | 5 Mbps | **ON** | **ON** | OFF | | | | | | | |
| | 10 Mbps | OFF | OFF | **ON** | | | | | | | |
| | **Fixed Addressing** | | | | | | | | | | |
| | 156 Kbps | **ON** | OFF | **ON** | | | | | | | |
| | 625 Kbps | OFF | **ON** | **ON** | | | | | | | |
| | 2.5 Mbps | **ON** | **ON** | **ON** | | | | | | | |

- **Mod and Terminal register setting**

| Item | Item Description | | DIP Switch Pole # | |
|---|---|---|---|---|
| | | | #11(MOD.) | #12(TER.) |
| MOD. | Mod Setting | Use System Area | OFF | |
| | | No System Area use | **ON** | |
| TER. | Terminal Setting | No Setting | | OFF |
| | | Setting to Terminal | | **ON** |

# 7. Trouble Shooting

- **How to diagnose by LED indicator**

| LED Status | Cause | Action |
|---|---|---|
| All LED turns off | -No power | -Check main power Cable |
| | -System power is not supplied. | -Contact Sales team and send module for repair. |
| MOD LED flashes green | -Failure of initialization EEPROM parameter. | -Contact Sales team and send module for repair. |
| MOD LED flashes red | -Excess of expansion slot<br>- Excess of IO size<br>- Wrong IO composition<br>-Occurrence of EEPROM checksum error | -Use expansion slot up to 32.<br>-Compose that IO total size is not excess.<br>-Check composition I/O Module |
| MOD LED is red | -Wrong address ID<br>-Occurrence critical error in firmware | -Contact Sales team and send module for repair. |
| I/O LED turns off | -Failure of realization expansion Module<br>-None expansion Module | -Check connector status both NA series and expansion module. |
| I/O LED flashes red | Failure of configuration baud rate | -Check communication cable with Master<br>-Check power for master. |
| | Failure of initialization I/O | -Use expansion slot up to 32.<br>-Compose that IO total size is not excess. |
| | | NA series notice unidentified expansion module ID. Check status of expansion module. |
| I/O LED is red | Failure of exchanging I/O data | Check status of expansion IO connection. |
| NET LED turns off | Failure of communication with Master | Check main power for master and communication cable. |
| NET LED flashed green | Failure of exchanging data with master | Check status in software for Master configuration. |
| NET LED is red | Communication connecting lost | Check BUS line cable for connection with master. |
| | | Check duplication address. |

## How to diagnose when device couldn't communicate network

**Inspection of wrong or omission cable connection.**

- Check status of cable connection for each node.
- Check that all color matches between connector and cable.
- Check wire omission.

**Terminator resistor**

- If terminator resistor is not installed, install terminator resistor
- Check location of terminator resistor

**Configuration of Node address**

- Check duplication node address.

**Configuration of Master**

- Check configuration of master
- Check whether to do download
- Check composition is right
  Configuration of communication baud rate
  I/O size
  Configuration of each node

**Ground and environment**

- Check ground is contacted
- Check environment factor (temperature, humidity, etc) is in less than regular limit